Phase 2

Trade of Motor Mechanic

Module 8

Unit 2

Braking System Hydraulics

Produced by

SOLAS

An tSeirbhís Oideachais Leanúnaigh agus Scileanna
Further Education and Training Authority

In cooperation with:

Subject Matter Experts

Martin McMahon

&

CDX Global

Curriculum Revision 2.2 16-01-07

© SOLAS 2013

Table of Contents

Introduction

Module 8 of this course covers the Braking System aspect of automotive technology. This is the second unit in module 8 and introduces the fundamental principles associated with the Hydraulic part of the Braking System.

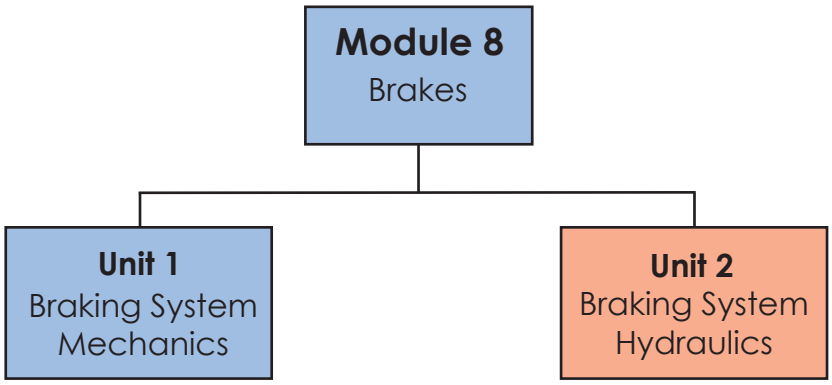

The Purpose of the automobile braking system is to reduce the speed of the automobile. This is achieved by the brake system converting kinetic energy to heat energy. Hydraulic brake systems use an incompressible fluid such as brake fluid to transmit forces from one location to another within the fluid. Most automobiles use hydraulics in the braking systems.

Hydraulic pressure is transmitted through liquid. Since liquid is effectively incompressible pressure applied to a liquid is transmitted without loss throughout the liquid. In a braking system, this allows a force applied to the brake pedal to act upon the brakes at the wheels.

This unit will cover the key Hydraulic components associated with the brake system and the relevant environment, health and safety.

Unit Objective

By the end of this unit each apprentice will be able to:

- State and apply the health, safety and precautionary procedures applicable to working on the braking system hydraulics
- Describe the personal hazards and environmental issues associated with brake lining dust and brake fluid
- Outline the main hydraulic principles in relation to the braking system
- Draw the basic hydraulic circuits for a single-circuit and multi-circuit braking system
- State the advantages of a diagonal split hydraulic circuit
- Visually inspect the rigid and flexible piping on a vehicle hydraulic brake circuit
- Describe the properties of brake fluid
- Describe the NCT/DoT VTM Brake Fluid test
- Carry out a vehicle brake fluid test to determine the level of moisture contamination
- Outline the purpose and fundamental principles of operation of the tandem brake master cylinder
- Explain the requirement for front-rear brake force distribution and identify the devices commonly used for this purpose
- State the purpose of each instrument panel warning indicator relative to the hydraulic braking system
- List the symptoms and causes of common brake faults and outline suitable diagnosis/repair procedures
- Outline the NCT/DoT VTM requirements applicable to the Brake Wheel Units, Service Brake Pedal and Service Brake Operation of the hydraulic braking system
- Examine the condition of the Brake Wheel Units, Service Brake Pedal and
- Service Brake Operation of automotive vehicles for compliance with NCT/DoT VTM requirements

1.0 Health, safety and Precautionary Procedures

Key Learning Points

- Health, safety and precautionary procedures applicable to working on the braking system hydraulics (including safe use of trolley jack and axle stands/vehicle lifts, use of eye protection and latex gloves, removal of brake dust with appropriate brake cleaning fluid, use of suitable face mask to avoid respiratory problems, working with appropriate brake tools, prevention of brake fluid spillage, pumping and checking brake pedal pressure prior to road test etc.).

1.1 Health and Safety

If the proper safety procedures are not adhered when working on Braking Systems this could lead to serious injury/health problems to personnel.

Instruction is given in the proper safety precautions applicable to working on, Braking Systems include the following:

- Use of trolley jacks
- Axle stands
- Vehicle lifts
- Removal of brake dust with appropriate brake cleaning fluid and the Use of suitable face mask to avoid respiratory problems
- Use of appropriate brake tools
- Prevention of brake fluid spillage (Used brake fluid disposed off in accordance with environmental regulations)
- Danger of serious auto – accidents if final checks are not made prior to road test e.g. pumping & checking brake pedal pressure, brake fluid levels etc.
- Use of Personal Protective Equipment (PPE)

Refer to motor risk assessments, Environmental policy and Material Safety Data Sheets (MSDS).

2.0 Personal Hazards and Environmental Issues

Key Learning Points

- Personal hazards associated with brake lining dust and brake fluid
- Environmental issues associated with disposal of used brake fluid

2.1 Personal/Environmental Hazards

If the proper safety procedures are not adhered to in regard to linings dust and brake/clutch fluid when working on the Clutch/breaking Systems this could lead to serious health problems e.g.

- Respiratory problems from airborne dust
- Asbestos dust causes lung cancer (may not show for decades after exposure)
- Eye damage from fluid splashes

Instruction is given in the proper safety procedures applicable to working on Clutch/braking systems which include the following key points:

- Use of appropriate PPE

Refer to motor risk assessments, Environmental policy and Material Safety Data Sheets (MSDS)

2.2 Environmental issues

The Storage and disposal of brake fluid must comply with current laws and regulations.

3.0 Hydraulic Principles in the Braking System

Key Learning Points

- Main hydraulic principles relating to the braking system (including incompressibility of fluid, pressure/force/area/piston movement relationship

3.1 Hydraulic Pressure & Force

Hydraulic brake systems use an incompressible fluid such as brake fluid to transmit forces from one location to another within the fluid. Most automobiles use hydraulics in the braking systems.

Hydraulic pressure is transmitted through liquid. Since liquid is effectively incompressible, pressure applied to a liquid is transmitted without loss throughout the liquid. In a braking system, this allows a force applied to the brake pedal to act upon the brakes at the wheels.

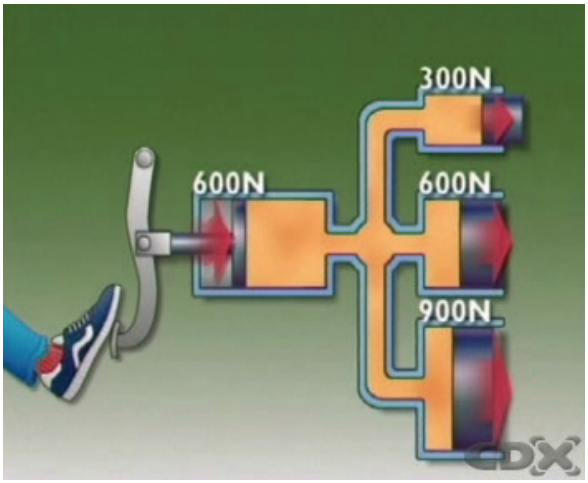

Hydraulic pressure can transmit increased force. Since pressure is force per unit area, the same pressure applied over different areas can produce different forces - larger and smaller.

Pressure

Pressure is the application of force to a surface and the concentration of that force in a given area. A finger can be pressed against a wall without making any lasting impression. However the same finger pushing a thumbtack can easily damage the wall even though the force applied is the same. This is because the point concentrates that force into a smaller area.

3.2 Force Ratio (Hydraulics)

Force Ratio Calculation

In a typical garage jack you might have a plunger of 10mm diameter pumping into a ram having a diameter of 50mm. This would give a force ratio of 25:1.

Area of Plunger $= \pi r^2$

$= 3.14 \times 5^2$

$= 78.5 mm^2$

Area of Ram $= \pi r^2$

$= 3.14 \times 25^2$

$= 1962.5 mm^2$

$$\text{Force Ratio} = \frac{\text{Area of Ram}}{\text{Area of Plunger}} \quad \frac{1962.5\ mm^2}{78.5\ mm^2} = 25$$

F.R = 25:1

In a brake system the master cylinder and slave cylinder relationship are of such a size to give a force ratio of 4:1 (approx.).

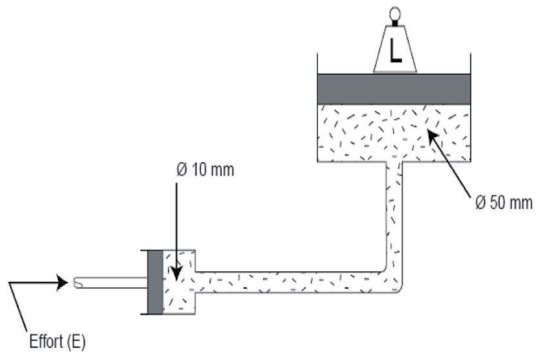

4.0 Basic Hydraulic Circuit Diagrams

Key Learning Points

- Basic hydraulic circuits for a single-circuit and multi-circuit braking system (single piston master cylinder with single brake line circuit and tandem master cylinder with diagonal split circuit)

Practical Task/ Drawing

This is a practical task. Please refer to your instructor for additional information, which is available from the automotive technical manuals.

Sample diagrams in section 5.1

5.0 Advantages of a Diagonal Split Hydraulic Circuit

Key Learning Points

- Advantages of a diagonal split hydraulic circuit

5.1 Divided Systems/Circuits

Modern cars use tandem master cylinders to suit divided or dual line braking systems. A divided system is safer in the event of partial failure.

Advantages: Fluid loss in one half of the system still leaves the other half able to stop the vehicle, although with an increase in stopping distance.

A wheel's braking ability depends on the load it's carrying during braking. So the type of vehicle is a major factor in how its system should be divided.

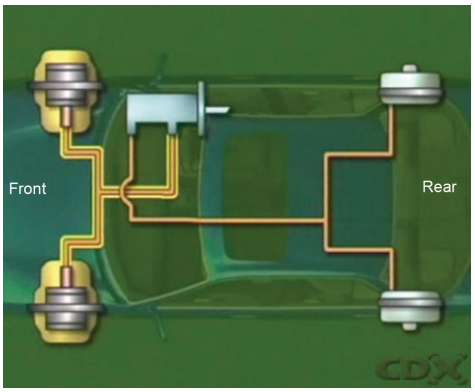

Front rear split

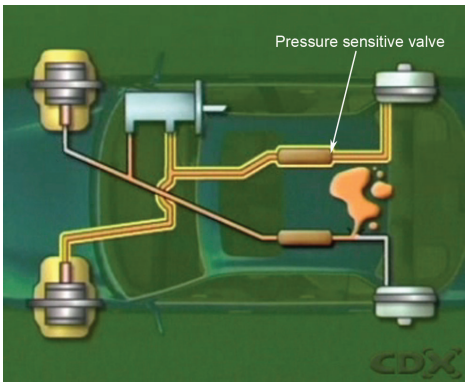

Diagonal split

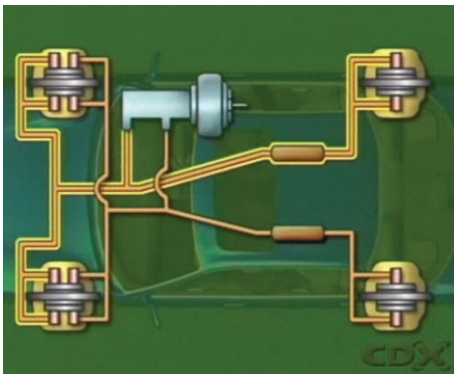

L split system

A front-engine rear-wheel drive car has around 30% of its load on its rear wheels, so its braking system can be divided in a vertical or front-rear split. This puts the front wheels in a different system from the rear wheels. If one half of the system fails - the front or the back - there's still enough separate braking capability left in the other half, to stop the vehicle.

6.0 Inspecting a Vehicle Hydraulic Brake Circuit

Key Learning Points

- Visual inspection of rigid and flexible piping on a vehicle hydraulic brake circuit to identify any physical deterioration or defects (such as bulges, cracks, cuts, fluid leakage, impact damage, rust)

Practical Task

This is a practical task. Please refer to your instructor for additional information, which is available from the automotive technical manuals.

7.0 The Properties of Brake Fluid

Key Learning Points

- Rationale for regular replacement of brake fluid due to hygroscopic properties
- Brake fluid test to determine the level of moisture contamination using equipment manufacturer's recommended procedures

7.1 Brake Fluid

Brake fluid is hydraulic oil that has specific properties e.g. low freezing point/high boiling point/low viscosity/compatibility with seals and hoses etc. These properties have been tested by governmental regulators who have graded them in accordance with their predetermined compliance data set by the Department of Transportation (DOT).

Note: If the brake fluid should boil, it will cause the vehicle to experience a spongy pedal and the vehicles stopping ability will be compromised brake fade can occur.

Brake fluid must maintain a very high boiling point. Exposure to air will cause the fluid to absorb moisture which will lower that boiling point.

Brake fluid is hygroscopic, which means, it absorbs water over time there fore should be changed in accordance to manufactures specifications. Testing of the brake fluid quality should be carried out according to the tool manufactures recommendations. NCT test requires you to Examine brake fluid reservoir for fluid level, leaks and condition of fluid.

The two most common brake fluids used in the automotive industry are fluids that contain Polyalkylene Glycol Ether and fluid that contains Silicone or Silicium-based Polymer. Both Fluids are common but very different in regards to the manner in which they perform.

The most common rated brake fluid used in automobiles has been DOT 3 or DOT 4. Do not substitute DOT 3 rated fluid for a rated DOT 4 this could create a safety hazard.

It must be noted that, DOT 5 brake fluid is different from DOT 3 and DOT 4 in that it is silicone-based. DOT 5 is NOT recommended for any vehicle equipped with antilock brakes (ABS) - but it can provide long-lasting protection against corrosion for vehicles that are stored for long periods of time or are driven in wet environments.

To accommodate vehicles fitted with antilock systems, DOT 5.1 fluid has been introduced. The DOT 5.1 fluid contains Polyalkylene Glycol Ether the same as DOT3 and 4. The major variation comes from the 'wet boiling point' determinations specifications.

Minimal Boiling Points are recorded as:

Wet Boiling Points

DOT 3 = 284° F (140° C)

DOT 4 = 311° F (155° C)

DOT 5 = 356° F (180° C)

DOT 5.1 = 375° F (190.6° C)

A major drawback for the use of DOT 5.1 is its higher cost factor.

Brake Fluid Precautions

Be careful:

- Not to spill fluid on the body work of the vehicle because it will remove paint.
- Not to allow brake fluid to enter the eyes, seek medical attention immediately.
- Not to allow fluid to enter cuts or other abrasions of the skin as this may cause infection. Always wash hands and tools after working with brake fluid.

Ensure that when topping up or changing brake fluid the correct brake fluid is used.

8.0 The NCT/DoT VTM Brake Fluid Test

Key Learning Points

- NCT/DoT VTM Brake Fluid test, requirements and practical test procedure

8.1 NCT Requirements

Refer to Item 41 of NCT manual 2004

9.0 Vehicle Brake Fluid Test

Practical Task

This is a practical task. As each brake fluid tester has a specific sequence for testing please refer to your instructor for additional information, which is available from the automotive technical manuals.

10.0 The Tandem Brake Master Cylinder

Key Learning Points

- Purpose and fundamental principles of operation of the tandem brake master cylinder

10.1 Tandem Master Cylinder

The tandem master cylinder transforms applied brake force into hydraulic pressure which is transferred to the wheel units through two separate circuits. This provides residual braking in the event of fluid loss.

Overview

With a basic master cylinder in the braking system, any loss of fluid e.g. because a component fails, could mean the whole braking system fails. To reduce this risk on modern vehicles must have at least 2 separate hydraulic systems the tandem master cylinder was introduced. Like 2 single-piston cylinders end-to-end, a tandem cylinder has a primary piston and a secondary piston. Each section of the cylinder has inlet and outlet ports and compensating ports. There can be 2 separate reservoirs or just one but it is divided into separate sections.

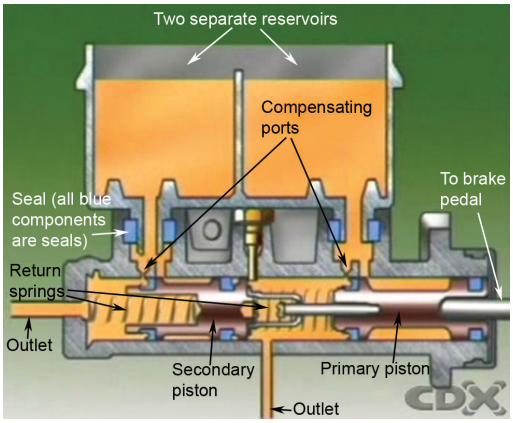

When the brake is applied the primary piston moves and closes its compensating port. Fluid pressure rises and acts on the secondary piston. It moves closing its compensating port. Pressure builds up in this circuit. Both pistons then move and displace fluid into their separate circuits and apply the brakes.

If there is a failure in the secondary circuit, the primary system continues to operate normally but with increased travel. If the primary circuit fails, no pressure is generated to move the secondary piston. So a rod attached to the front of the primary piston will push the secondary piston directly so that it still operates. A switch can warn of loss of pressure in the front or rear circuits. Or one that warns of low fluid level can be fitted to the reservoir.

The tandem master cylinder just like the single piston master cylinder can have problems with a low-pressure area developing when the piston returns quickly but the fluid lags. The tandem master cylinder overcomes this by using grooves in the side of the primary cup. These grooves allow fluid to flow from the inlet port into the low-pressure area.

11.0 Front-Rear Brake Force Distribution and its Devices

Key Learning Points

- Requirement for brake force distribution (due to weight transfer to front wheels during braking)
- Devices used for brake force distribution (including load-sensing brake pressure limiting valve, pressure-sensitive and inertia/ deceleration-sensitive brake pressure proportioning valves)

11.1 Proportioning Valve

The proportioning valve divides up the braking effort applied to front and rear wheels under heavy braking, according to how load is distributed across a vehicle.

The effectiveness of braking force is determined by tire-to-road friction. And this increases as load increases.

Applying the brakes causes the front of this vehicle to dip. This causes greater tire-to-road friction on the front tires and less on the rear. This kind of change of load is called load transfer.

If equal braking force is applied to the front and rear wheels the smaller rear load can make the rear wheels lock and perhaps skid. The braking force applied to the wheels needs to be adjusted to allow for changes in load.

11.2 Proportioning Valve Operation

The proportioning valve adjusts braking force to allow for load transfer. It can be pressure-sensitive, or load-sensitive. The pressure-sensitive valve can be in the master cylinder or in a separate unit in the rear brake circuit. The load-sensitive type can be in the body or the axle where it can respond to load changes and change the braking effort as needed. Master cylinder applications usually combine the proportioning valve with a pressure differential switch. Testing of the pressure-sensitive or load-sensitive valve is done is done according to manufactures specification.

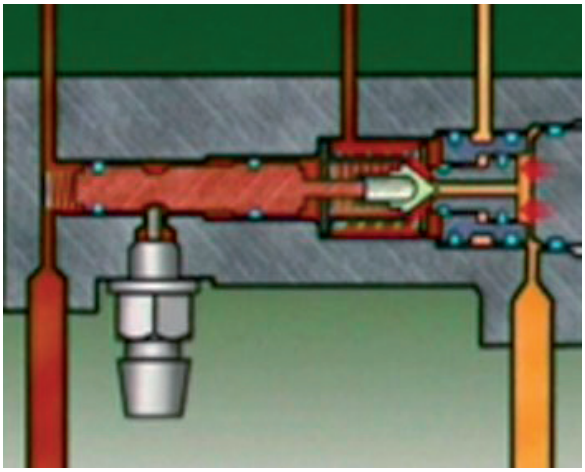

12.0 Instrument Panel Brake Warning Indicators

Key Learning Points

- Purpose of each braking system warning indicator on the instrument panel (including low fluid level, handbrake engaged, brake pad wear, ABS fault)

12.1 Brake System Warning Indicators

Brake system warning indicators are on the instrument panel of most cars this is to alert driver to the fact that there may be one or more problems with the braking system e.g.

1. Low fluid level.
2. Handbrake engagement.
3. Brake pad wear.
4. A.B.S. faults

13.0 Common Brake Faults and Suitable Diagnosis

Key Learning Points

- Symptoms and causes of common brake faults (including brake fade, excessive pedal travel, spongy brake pedal, fluid loss, pull to one side) and suitable diagnosis/repair procedures

13.1 Symptoms and Causes of Common Brake Faults

Fault	*Cause*	*Action*
Fade	Incorrect linings. Badly lined shoes. Distorted shoes. Overloaded vehicle. Excessive braking. Old hydraulic fluid.	Replace the shoes, decrease vehicle load or renew hydraulic fluid as necessary.
Spongy pedal	Air in system. Badly lined shoes. Shoes distorted or incorrectly set. Faulty drums. Weak master cylinder mounting.	Check for air in the system, bleed if necessary. Check the master cylinder mounting, lined shoes and drums and replace as necessary. Renew the hydraulic fluid if applicable.
Long pedal	A. Disc Brakes. Discs running out pushing pads back. Distorted damping shims. Misplaced dust covers. B. Drum Brakes need adjustment. Fluid leak. Fluid contamination Worn or swollen seals in master cylinder. Blocked filler cap vent.	A. Check that the disc run out does not exceed 0.1mm (1. Rotate the disc on the hub. 2. Check the disc/ hub mounting faces.) B. Check the brake adjustment, filler cap vent and for fluid leaks. Adjust brakes, repair leak, if necessary, or renew seals and change fluid.

Fault	*Cause*	*Action*
Brakes binding	Brakes or handbrake maladjusted. No clearance at master cylinder push rod. Seals swollen. Seized pistons. Shoe springs weak or broken. Servo faulty.	Check the brake adjustment and handbrake linkage. Check for clearance at the master cylinder, seized pistons or weak shoe springs. Repair or replace parts as necessary.
Hard pedal-poor braking	Incorrect linings. Glazed linings. Linings wet, greasy or not bedded correctly. Servo unit inoperative. Seized calliper pistons. Worn shock absorbers causing wheel bounce.	Replace the shoes, or if glazed, lightly rub down with rough sandpaper. Check calliper for damage and repair as necessary. Fit new shock absorbers.
Brakes pulling	Seized pistons. Variation in linings. Unsuitable tyres or pressures. Worn shock absorbers. Loose brakes. Greasy linings. Faulty drums, suspension or steering. Contaminated seals.	Check the tyres and pressures, seized pistons, greasy linings, or loose brakes; then check suspension, steering and drums. Repair or replace as necessary. Fit new shock absorbers. Rectify contamination, fit new seals and hoses
Fall in fluid level	Worn disc pads. External leak. Leak in Servo Unit.	Check the pads for wear and for hydraulic fluid leakage.
Disc brake squeal-pad rattle	Worn retaining pins. Worn discs. No pad damping shims or springs.	Renew the retaining pins, or discs. Fit new greased damping shims or new springs.
Uneven or excessive pad wear	Disc corroded (by salt). Disc badly scored. Pads require interchanging. Incorrect friction material.	Check the disc for corrosion, or scoring and replace if necessary. Alternatively, interchange pads. Fit new pads with correct friction material.

14.0 NCT/DoT VTM Requirements

Key Learning Points

- Examination of the Brake Wheel Units, the Service Brake Pedal and the Service Brake Operation (inspection inside the vehicle) of automotive vehicles for compliance with current NCT/DoT VTM requirements

14.1 NCT Requirements

Please refer to item 41, 51, 52 and 53 of NCT manual 2004 for the relevant specifications.

15.0 Checking Brake Wheel Units and its Serviceability

Key Learning Points

- Current NCT/DoT VTM requirements for the Brake Wheel Units, Service Brake Pedal and Service Brake Operation (Inspection inside the Vehicle)
- Use of data manuals/manufacturer's manuals/NCT/DoT VTM manual

Practical Task

This is a practical task. Please refer to your instructor for additional information, which is available from the automotive technical manuals.

Self Assessment

Q1: The function of the proportioning valve is to break up the braking effort between: (Tick ONE box only)

- ❑ 1. Disc brake systems and drum brake systems
- ❑ 2. The front and rear brakes under heavy braking application
- ❑ 3. The front and rear brakes under normal braking application according to how the load is distributed across the vehicle
- ❑ 4. The rear brakes under heavy braking application according to how the load is distributed across the vehicle

Q2: Technician A says that tandem brake systems can be split from front to rear. Technician B says that tandem brake systems can be split diagonally. Who is correct? (Tick ONE box only)

- ❑ 1. Technician A
- ❑ 2. Technician B
- ❑ 3. Both Technician A and Technician B
- ❑ 4. Neither Technician A nor Technician B

Q3: Some manufacturers fit audible warning sensors to their disc brake linings. The purpose of this sensor is: (Tick ONE box only)

- ❑ 1. To indicate to the driver that the brakes are being applied
- ❑ 2. To warn the driver that the disc brake linings are worn down to the stator
- ❑ 3. To warn the driver that the disc brake linings are worn down to the disk
- ❑ 4. To warn the driver that the disc brake linings are worn down and need replacing before they damage the disk

Q4: On some master cylinders there are two fluid level marks. These indicate: (Tick ONE box only)

- ❑ 1. The lower mark indicates the minimum fluid level for cold brake fluid
- ❑ 2. The lower mark indicates the maximum fluid level for hot brake fluid
- ❑ 3. The lower mark indicates the minimum fluid level for the brake fluid
- ❑ 4. The minimum and maximum brake fluid levels

Q5: In drum brake systems the residual line pressure valve: (Tick ONE box only)

- ❑ 1. Proportions the rear braking effort
- ❑ 2. Maintains the rear braking effort
- ❑ 3. Maintains wheel cylinder cups in expanded condition
- ❑ 4. Limits the rear braking effort

Q6: Hydraulic brake fluid should be changed every 12 months. This is because the: (Tick ONE box only)

- ❑ 1. Viscosity of the fluid decreases
- ❑ 2. Moisture content of the fluid increases
- ❑ 3. Fluid evaporates
- ❑ 4. Fluid wears out

Q7: Hydraulic brake fluid containers must not be left open to the atmosphere as the fluid will: (Tick ONE box only)

- ❑ 1. Discolour
- ❑ 2. Evaporate
- ❑ 3. Deteriorate
- ❑ 4. Smell

Q8: A vehicle fitted with disc brakes requires a brake fluid with a: (Tick one box only)

- ❑ 1. High boiling point
- ❑ 2. Low boiling point
- ❑ 3. High freezing point
- ❑ 4. Mineral oil base

Suggested Exercises

1. Use an electronic data facility to procure manufacturer's appropriate data for use with practical exercises
2. Visually inspect the rigid and flexible piping on a vehicle hydraulic brake circuit
3. Describe the properties of brake fluid
4. Carry out a vehicle brake fluid test to determine the level of moisture contamination using the equipment-manufacturer's recommended procedures

Training Resources

1. Training vehicles/training units, data manuals, manufacturer's manuals, NCT/DoT VTM manual, video/multimedia resources
2. Selection of hydraulic braking system components including wheel cylinders, brake callipers, flexible brake hoses, torque spanners, calliper piston retraction tools, trolley jacks, axle stands
3. Suitable storage facility for waste brake fluid
4. Eye protection, latex gloves, face masks
5. Sealed supply of appropriate brake fluids etc.

Suggested Further Reading

- Advanced Automotive Diagnosis. Tom Denton. ISBN 0340741236
- Automobile Electrical and Electronic Systems (3rd Edition). Tom Denton. ISBN 0750662190
- Automotive Mechanics (10th Edition). William H. Crouse and Donald L. Anglin. ISBN 0028009436
- Bosch Automotive Electrics Automotive Electronics: Systems and Components (4th Edition). Robert Bosch. ISBN 0837610508
- Bosch Automotive Handbook (6th Edition). Robert Bosch. ISBN 1860584748
- Bosch Automotive Technology Technical Instruction booklet series (numerous titles)
- Hillier's Fundamentals of Motor Vehicle Technology: Book One (5th Edition). V.A.W. Hillier and Peter Coombes. ISBN 0748780823
- Hillier's Fundamentals of Motor Vehicle Technology: Book Two (5th Edition). V.A.W. Hillier and Peter Coombes. ISBN 0748780998
- Modern Automotive Technology. James E. Duffy. ISBN 1566376106
- Motor Vehicle Craft Studies - Principles. F.K. Sully. ISBN 040800133X
- National Car Test (NCT) Manual (Department of Transport, Vehicle Testers Manual - DoT VTM). Department of Transport
- Transmission, Chassis and Related Systems (Vehicle Maintenance and Repair Series: Level 3) (3rd Edition) John Whipp and Roy Brooks. ISBN 186152806X
- Vehicle and Engine Technology (2nd Edition). Heinz Heisler. ISBN 0340691867
- http://www.cdxglobal.com/
- http://auto.howstuffworks.com/
- http://www.autoshop101.com/
- http://www.cdxetextbook.com/
- Automotive Encyclopedia and Text Book Resource (CD version of e-textbook), Available from your instructor.

Notes

SOLAS

An tSeirbhís Oideachais Leanúnaigh agus Scileanna
Further Education and Training Authority

27-33 Upper Baggot Street
Dublin 4