TRADE OF
VEHICLE BODY REPAIR

PHASE 2

Module 5

UNIT: 6

Spraying Techniques

Produced by

SOLAS

An tSeirbhís Oideachais Leanúnaigh agus Scileanna
Further Education and Training Authority

In cooperation with subject matter expert:

Maurice Stack

Some material courtesy of CDX Global and FENC – Further Education National Consortium.

© SOLAS 2014

Table of Contents

Introduction 8

Unit Objective 9
Spray-Painting Material 9

1.0 Efficiently Prepare and Paint Vehicle Panels with Two-Pack Acrylic Materials 10

1.1 Substrate Preparation for 2K. Acrylic Paint Materials 10

1.2 Substrate Preparation for 2K Acrylic Paint Materials 11

1.3 Paint Viscosity in Relation to Climatic Conditions 16

1.4 Ecological Refinishing Systems 16

1.5 Modern Application Methods 16

1.6 Spray Gun Free Air Delivery and Pressure Requirement 17

1.7 Spraying Pressure 17

1.8 Spray gun delivery and pressure requirements 18

1.9 Air Transformer (Filter/Regulator) 19

1.10 Spray Gun Free Air Delivery and Pressure Requirements 20

1.11 Spray Gun Free Air Delivery and Pressure Requirements 21

2.0 To Set up and Correctly Operate a Spray Gun 22

2.1 Spray Gun Set up for 2K. Acrylic Materials 22

2.2 Spray Pattern Test 25

2.3 Faulty Spray Patterns 28

3.0 Spray Patterns Defects 29
4.0 Choose a Suitable Spraying Cycle. 30

4.1 Spraying Technique for Edge-to-Edge Painting 30

4.2 Spray Gun Angle and Distance 31

4.3 Spray Gun Angle and Distance 33

4.4 Spraying Curved Surfaces 38

4.5 Spraying External Corners 38

5.0 Choose a Suitable Spraying Cycle 39
6.0 Planning a Spraying Sequence before you Spray 43
7.0 Spray Booth Operation 45

7.1 Spray Booth Operation 47

8.0 Selection of Suitable Personal Protective Equipment 49

8.1 See mod 5 unit 1 Health and Safety 49

9.0 A Suitable Spraying and Baking Cycle on a Spray Booth 49

9.1 Spray Booth Operation 49

10.0 Spray Booth Operation 50

10.1 Maintenance 52

11.0 Defects Which May Arise During the Storage of Paint 54

11.1 Bodying 54

11.2 Gassing 54

11.3 Settling 55

12.0 Identify Common Paint Faults 57

12.1 Bleeding 56

12.2 Dirt 57

12.3 Blowing 58

12.4 Blushing 59

12.5 Cissing 59

12.6 Dry Spray 60

12.7 Floating and Flooding 61

12.8 Industrial Fall-out 62

12.9 Loss of Gloss 63

12.10 Low Gloss 64

12.11 Poor Adhesion 65

12.12 Popping 67

12.13 Poor Opacity 68

12.14 Peeling 69

12.15 Runs and Sags 69

12.16 Rusting 69

12.17 Staining 70

12.18 Scratch Opening 71

12.19 Sinkage 71

12.20 Slow drying 72

12.21 Striping 73

12.22 Water Marking and Spotting 74

13.0 Spray Gun Washing Procedure 75

Summary 78
Self Assessment 79
Suggested Exercise

Table of Figures

Figure 1: DVFR Filter Regulators 20

Figure 2: Air Caps 22

Figure 3: Cross Section of External and Internal Mix Air Caps 23

Figure 4: Air Caps 23

Figure 5: Selecting an Air Cap 24

Figure 6: Correct Spray Painting Pressure 25

Figure 7: Faulty Spray Patterns 27

Figure 8 Figure 9 Figure 10 27

Figure 11 Figure 12 28

Figure 13: Proper Spraying Distance 31

Figure 14: Correct at 90º 32

Figure 15: Hand Movement 32

Figure 16: Incorrect Spraying Technique 33

Figure 17: 5 Gun Passes 34

Figure 18: Spraying Techniques 35

Figure 19: Spraying Techniques 35

Figure 20: Spraying Techniques 35

Figure 21: Spraying Internal Corners 36

Figure 22: Spraying Curved Surfaces 37

Figure 23: Spraying of External Corners 37

Figure 24: Spraying Sequence 43

Figure 25: Spraying Sequence 43

Figure 26: Spray Booth 45

Figure 27: Ovens 47

Introduction

Surface Preparation

The surface to be finished should be well cleaned before painting. If the paint manufacturer's instructions call for it, the surface should be chemically treated. Use a blow off gun and tack rag to remove dust and dirt. Remember that no amount of primer or paint will cover up a badly prepared surface.

Unit Objective

Spray-Painting Material

By the end of this unit each apprentice will be able to:

- Determine the correct set up for a spray gun and operate it correctly
- Efficiently prepare and paint vehicle panels with two-pack acrylic materials
- Choose a suitable spraying and baking cycle on a spray booth
- Identify common paint faults

Key Learning Points:

- Spray gun set-up for 2K acrylic materials
- Spray gun free air delivery and pressure requirements
- Substrate preparation for 2K acrylic paint materials
- Spray gun angle and distance
- Selection of suitable personal protective equipment
- Paint viscosity in relation to climatic conditions
- Spraying technique for edge-to-edge painting
- Spray booth operation
- Paint finish fault identification
- Spray gun washing procedure

1.0 Efficiently Prepare and Paint Vehicle Panels with Two-Pack Acrylic Materials

1.1 Substrate Preparation for 2K. Acrylic Paint Materials

It's human to make mistakes, in fact, it happens all the time. The most frequent cause: lack of information.

Here are important tips which can help you bridge that information gap – and achieve the perfect results and eliminate unnecessary extra expense.

So plan for perfection from the very beginning. Step one: don't cut corners when preparing substrates, because in the end it's often you who will pay for it.

For example through:

- Extra man-hours if the job has to be done again.
- Extra material requirements.
- Extra energy consumption.
- Deadline problems.
- Interruptions to other jobs.
- Staff de-motivation.

= Extra expenses and bother you can well do without!

So by preparing substrates properly, you can eliminate the problems listed above right from the beginning.

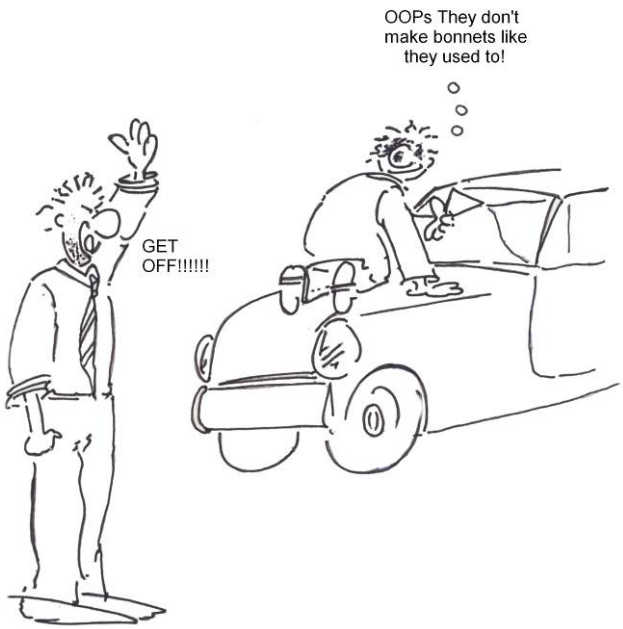

1.2 Substrate Preparation for 2K Acrylic Paint Materials

Factors for Success

Man-hours are by far the biggest cost factor when preparing a damaged substrate for refinishing. Effective substrate preparation therefore depends on the following:

- Quality workmanship
- Speed
- Reliability
- Efficiency
- Effective quality control

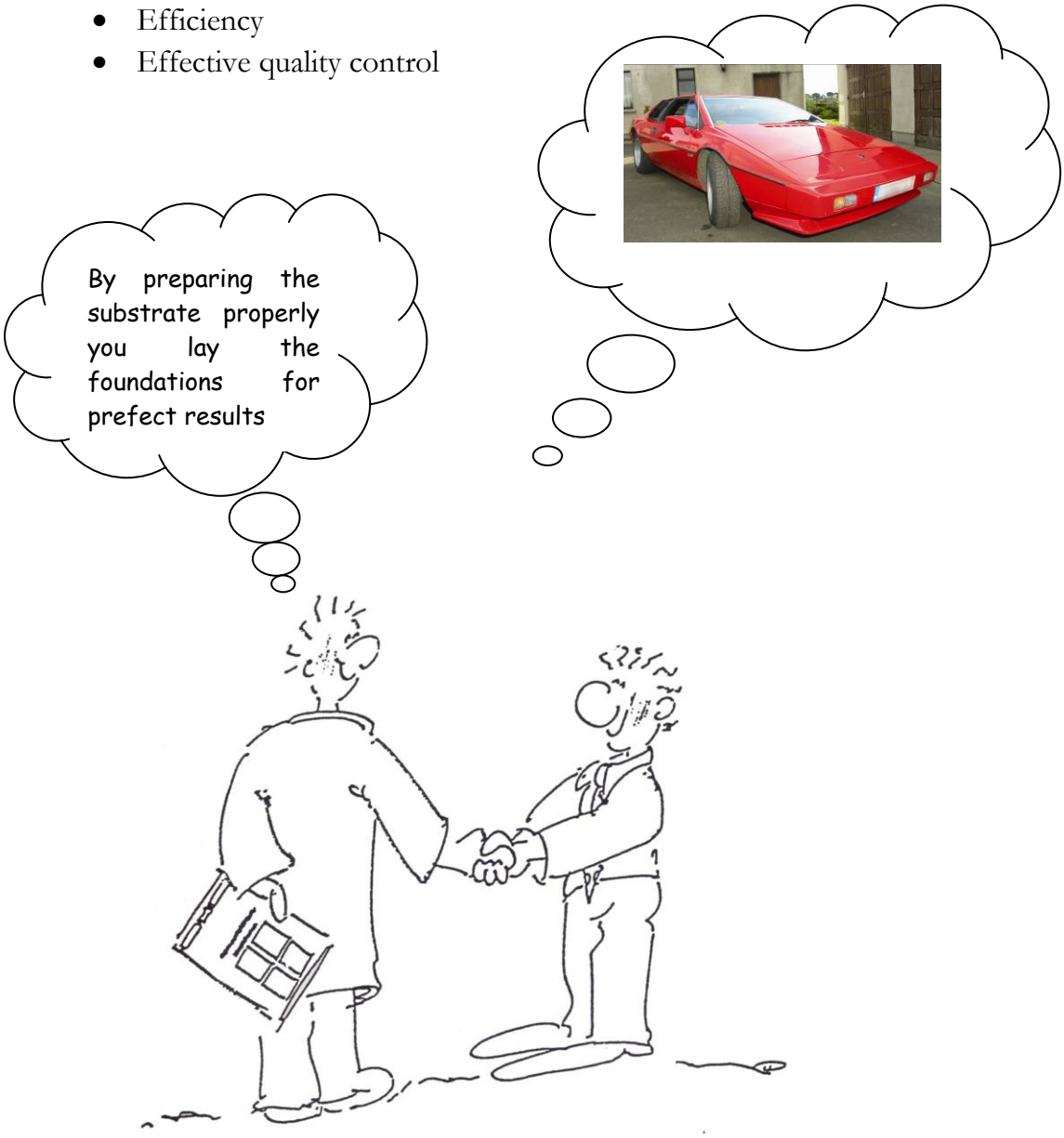

Sanding Machines Recommended for Preparing Substrates

Different sanding actions, different applications

Right Angle Sander

Use only for corroded areas, older and thicker paint layers and welded seams.

Orbital Sander

Orbital Sander

For large areas

Tools Recommended for Manual Sanding

Abrasive Holders

Sanding Block with Dust Extractor, sanding file with dust extractor, blocks for manual dry and wet sanding.

The 15-step way to ensure the damaged area is smooth and non-porous. Make sure each step is carried out correctly.

Remember: By cutting corners, you risk losing your good name and future business.

1. Clean damaged area with clean water
2. Carefully degrease using silicon remover
3. Sand damaged area with circular movements from the centre
4. Outwards using P 80. dry sanding paper
5. Eccentric sanding with P 80. Final sanding with P 120 or P150
6. Clean thoroughly to remove all sanding dust
7. Solvent test: apply 2K-Thinner with a cloth and wait approx1 minute
8. Solvent test. Caution: special care required when applying
9. Thinner to the factory-finish primer and topcoat. Check out the insulating and refinishing systems used
10. Clean using silicon remover
11. Apply bare metal etch primer
12. Apply filler polyester stopper after flash-off
13. Smooth-sand using a sanding machine or sanding block with P80 – P 150 dry sanding paper
14. If necessary, apply additional stopper or spray filler
15. Important: beforehand you must apply etch primer to the bare patches of metal!
16. Smooth-sand using a sanding machine or sanding block with P 150 – P 240 dry sanding paper

17. Using the eccentric sander (P 180 – P 240), briefly sand the damaged area and the area surrounding it

18. Clean thoroughly to remove all sanding dust

19. The damaged area should now be smooth and non-porous

If the 15 steps have been completed properly, the damaged area is ready for priming.

The following criteria determine the correct approach to the priming stage of a job:

- The nature of the damage
- The manufacturer and type of primer and topcoat used
- The size of the damaged area
- Metallic substrates: steel, zinc, aluminium
- The kind of substrate being repaired: when priming of spare parts
- What kind of substrate on vehicle

Systematic priming

- Mask the bodywork surrounding the damaged area
- Thoroughly prime the exposed metal using acid primer
- Apply primer to manufacturers spec (flash off)
- Do not prime up to masking tape
- Allow the primer surfacer to be thoroughly air dried or force dried (essential for avoiding sinkage and contouring) before flatting

1.3 Paint Viscosity in Relation to Climatic Conditions

Viscosity Cup

Paint Preparation

Today's finishes are extremely complex chemical formulations. All of them will usually require the addition of thinners (for lacquers) or reducers (for enamels) to get to a viscosity appropriate for spraying. Many of them also have hardeners or other chemicals added to them to ensure correct colour match, gloss, hardness, drying time or other characteristics necessary to produce a first class finish.

You need to check the viscosity consult material data sheets for viscosity rating.

1.4 Ecological Refinishing Systems

The production and application of paints and coatings is inconceivable without solvents. That is why the experts have developed advanced production methods to replace the conventional organic solvents with more eco-friendly agents or to reduce there use drastically.

All Standohyd products, for example, can be thinned with eco-friendly deionized water. High-solid (HS) and very high-solid (VHS) paints, on the other hand, characteristically contain up to 80% solids when ready for application. This means that they contain decisively fewer volatile solvents than conventional paint systems.

1.5 Modern Application Methods

The purpose of modern application methods is to reduce the burden on man and the environment.

Low-mist HVLP (High Volume, Low Pressure) spray guns are particularly effective in this respect.

This HVLP technology is based on the principle of combining a low internal pressure inside the nozzle with a large spray nozzle.

The low-mist HVLP spray guns operate at approx. 0.7 bar measured expulsion instead of the 2.5-3.0 bar of conventional spray guns.

Result: application efficiency rises to 65% with only 35% overspray.

The ratio obtained with conventional high-pressure spray guns is exactly the opposite.

1.6 Spray Gun Free Air Delivery and Pressure Requirement

Discipline matters more than a rigid set of rules. Take an important example – spraying pressure. This will depend upon a combination of factors which will vary in each situation. These must be determined before spraying operation is carried out.

1.7 Spraying Pressure

The correct spraying pressure for any paint will depend upon a combination of varying factors:

Type of paint

Type of thinner e.g. fast, slow, retarded

Viscosity

Air cap capacity

Paint emission rate

Pressure gauge accuracy

Pressure drop

The optimum spraying pressure is the lowest needed to obtain proper atomization, emission rate and fan width:

Too high a pressure results in excessive paint loss through overspray (and therefore high paint usage), and in poor flow, due to high solvent evaporation before the paint reaches the surface being sprayed.

Too low a pressure gives a paint film with poor drying characteristics, due to high solvent retention: and the film will be prone to bubbling and sagging.

Control of the amount, pressure, cleanliness of the air going into a spray gun is of critical importance to the system. There are various types of equipment available to perform this function.

What is air control equipment?

A piece of equipment installed between the air compressor and point of use which modifies the nature of the air stream. This could be a change in pressure, in volume, in cleanliness, or some combination of all of thee above.

Is air control equipment necessary?

Air piped directly from a compressor to a spray gun is of no use in spray painting. Air contains small but harmful quantities of water, oil, dirt, and other contaminants which lessen the quantity of the sprayed finish. And the air will also vary in pressure during the application, which will cause various problems.

1.8 Spray gun delivery and pressure requirements

Types of Air Control Equipment

Air control devices come in a very wide variety of types, but they basically all perform one or more of the following functions:

Air filtering and cleaning, air pressure regulation and indication of pressure, air distribution through multiple outlets.

Some typical devices to perform these functions are called air transformers, air condensers, air regulators, and in some circumstances, air lubricators. All of these types will be covered below.

1.9 Air Transformer (Filter/Regulator)

This is a multi purpose device which removes oil, dirt and moisture from the compressed air, filters and regulates the air, indicates by gauge the regulated air pressure, and provides multiple air outlets for spray guns, dusters and air operated tools, etc.

Some air transformers are equipped with a second gauge which indicates main line pressure.

How an Air Transformer Works

The transformer removes entrained dirt, oil and moisture by a series of baffles, centrifugal force, expansion chambers, impingement plates and filters, allowing only clean, dry air to emerge from the outlets. The air regulating valve provides positive control ensuring uniformly constant air pressure. Gauges indicate regulated air pressure, and in some cases, mainline pressure as well. Outlet with valves allow compressed air to be distributes where it is needed. The drain valve provides for elimination of sludge consisting of oil, dirt and moisture.

DevilBiss DVFR-2 Filter Regulator, Coalescer

Provides air filtered to 0.01 micron suitable for air-fed respiratory outfits, with an air flow of 50cm (1415L/Min). Suitable for use in booth/oven up to 100°C (212°F). It has a three ball valve controlled outlets.

Replacements DVFR Filter Elements

Part Number:

DV-9451705 Replacement 5 micron filter element for DVFR-1 and DVFR-2

DV-9451771 Replacement 0.01 micron fine filter breathing air element for DVFR-2

DV-9451706 Replacement 20 micron filter elements for DVFR-3

1.10 Spray Gun Free Air Delivery and Pressure Requirements

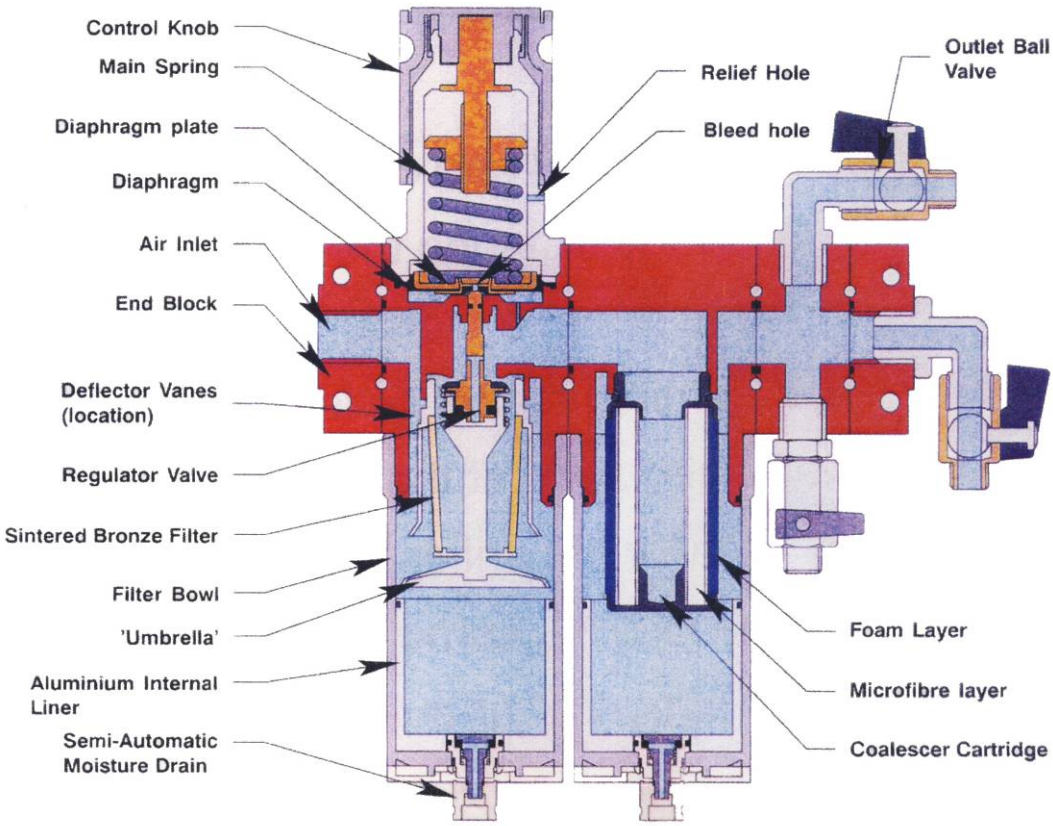

Figure 1: DVFR Filter Regulators

1.11 Spray Gun Free Air Delivery and Pressure Requirements

See Module 5 unit 2 Spray Painting Equipment – Air atomizing spray guns for pressure requirements.

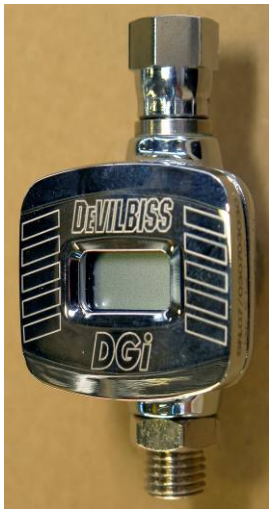

In-Line Air Adjusting Values

- Light weight at the gun pressure adjustment
- Fits neatly in-line at the gun air inlet
- Ideal for setting up compliant and HVLP spray guns
- Increase or decrease working pressure at-the-gun
- Loose swivel nut for convenient positioning
- Lightweight design (only 50 gms) does not affect balance
- 40mm diameter gauge in psi and bar
- Calibrated up to 11 bar (160PSI)

2.0 To Set up and Correctly Operate a Spray Gun

2.1 Spray Gun Set up for 2K. Acrylic Materials

What happens when the trigger is pulled?

As the trigger is pulled back, it first makes contact with the air valve stem, which turns on the air. It then moves to the fluid needle, pulling it out of the fluid tip so paint can flow. When the trigger is released, this process is reversed. There is always atomization air at the air cap whenever paint is turned on or off.

What is the function of the air cap?

The air cap directs compressed air into the material stream to atomize it and form the spray pattern. There are various styles of caps produced in different sizes and shapes for all types of applications. (Figure 2)

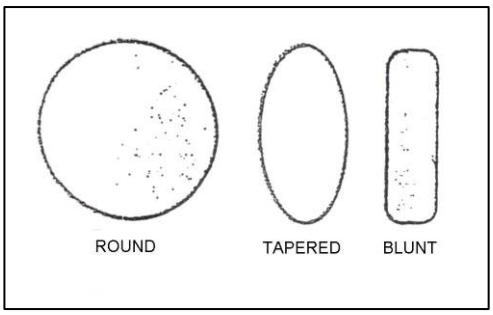

Figure 2: Air Caps

What air cap classifications are there?

All air caps can be divided into External or Internal mix classifications. External mix caps are used with either suction or pressure feed and eject air through either one or more holes to atomize the fluid (Figure 3). External mix caps range from single orifice types to multiple jet caps. External mix caps are normally used in refinishing work where a high quality finish is required.

Internal mix air caps mix air and material inside the gun cap before ejecting them through a single slot or round orifice and are used only with pressure feed.

Atomization air and material pressure must be approximately equal at the gun.

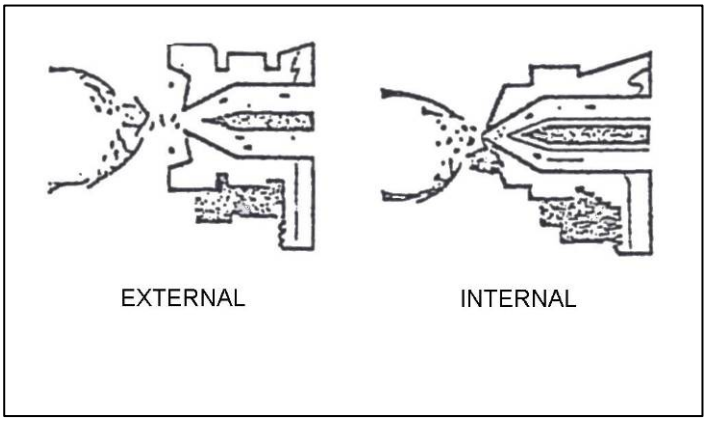

Figure 3: Cross Section of External and Internal Mix Air Caps

What are the advantages of the Multiple Jet Cap? (Figure 4)

- Better atomization for the more viscous materials.
- Higher atomization pressures can be used on more viscous materials with less danger of split spray pattern.
- Greater uniformity in pattern due to better equalization of air volume and pressure from cap.
- For materials that can be sprayed with lower pressures, multiple jet caps provide better atomization.

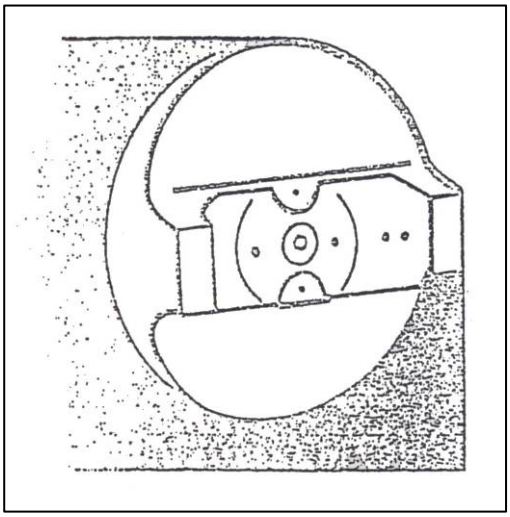

Figure 4: Air Caps

How should an Air Cap be selected? (Figure 5)

On the following factors:

- Volume of air (in cubic feet per minute-CFM) and pressure (in pounds per square inch-PSI) available.
- Material feed system to be used – pressure or suction.
- Type and volume of material to be sprayed.
- Size of fluid tip to be used. Most air caps work best with certain fluid tip and needle combinations.
- Size and nature of object or surface to be sprayed. Many or large orifices increase ability to atomize more material for painting large objects with great speed. Fewer or smaller orifices usually require less air, produce smaller spray patterns and deliver less material to conveniently paint small objects or apply coatings at lower speeds.
- See DeVilbliss Catalogue for the proper selection of the air cap, tip and needle combination.

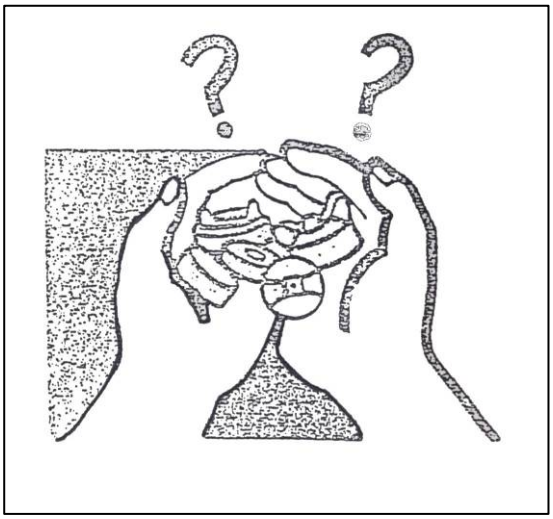

Figure 5: Selecting an Air Cap

What is the function of the fluid tip and needle?

They meter and direct the flow of material from the gun into the air stream. The fluid tip forms an internal seat for the fluid needle which shuts off the flow of material. The amount of material which actually leaves the front of the gun depends on the size of the fluid tip opening provided when the needle is unseated from the tip. Fluid tips are available in a variety of sizes to properly handle materials of various types, viscosities and pass the required volume of material to the cap for different speeds of application.

What is the Nozzle Combination?

In actual practice, the air cap, fluid tip and needle are all selected together as a unit, since all of them together affect the quality of the spray pattern and finish. These three items as a unit are referred to as the nozzle combination.

What is the Fluid Needle Adjustment?

This adjustment controls the travel of the fluid needle which allows more or less material through the fluid tip.

2.2 Spray Pattern Test

Before painting, the spray pattern should be checked to confirm proper atomization and size and shape of spray pattern.

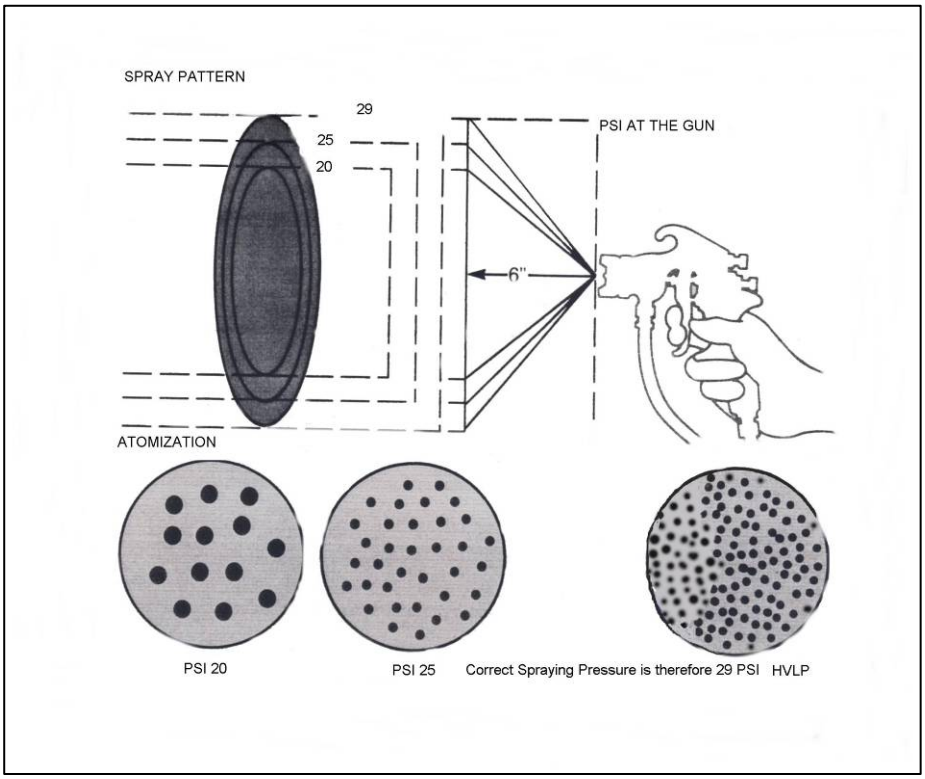

Figure 6: Correct Spray Painting Pressure

Air pressure too high may lead to:

- Cob-webbing
- Dry-spray
- Orange peel
- Low gloss (due to over atomization)

Air pressure too low may lead to:

- Floating
- Popping
- Pinholing
- Runs and Sags

Spray Pattern

The normal spray pattern is a rectangle with round ends. Paint must be distributed evenly throughout the pattern, and the shape must not be distorted. Any reduction of the pattern to a round spot must be accompanied by a reduction in paint delivery – otherwise overloading and the consequent sags and runs, will result.

The size of the pattern is governed by the type and capacity of the spray gun set up and can be adjusted by using the controls on the gun. Any attempts to vary the pattern size by increasing or decreasing the distance between the gun and the work surface will lead to excessive dry spray or wet spray respectively.

Spray Pattern Test

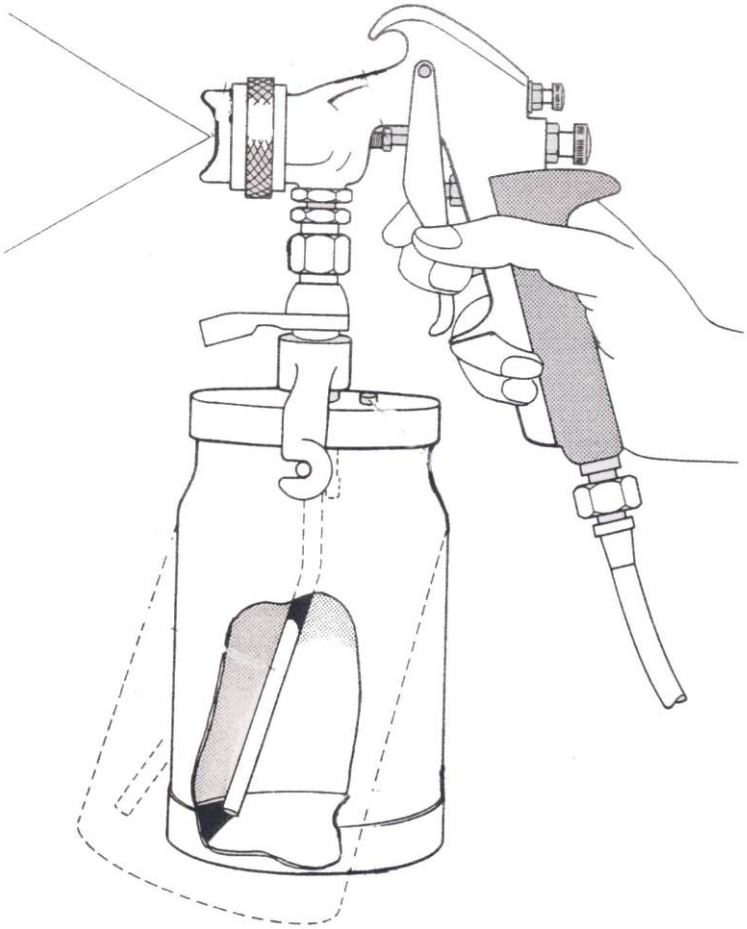

Figure 7: Faulty Spray Patterns

Figure 8

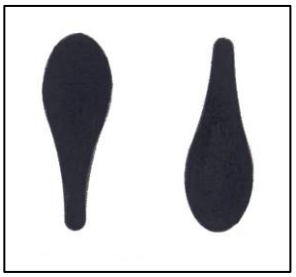

Figure 9

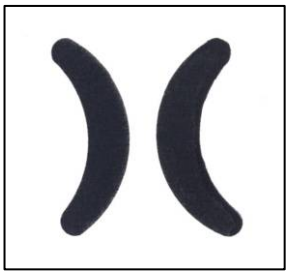

Figure 10

Figure 11

Figure 12

2.3 Faulty Spray Patterns

The normal spray pattern produced by a correctly adjusted spray gun is shown in Figure 8 and defective spray gun patterns can develop from the following causes:

Top or bottom heavy pattern (Figure 9) caused by:

- Horn holes in air cap partially blocked
- Obstruction on top or bottom of fluid tip
- Dirt on air cap seat or fluid tip seat

Heavy right or left side pattern (Figure 10) caused by:

- Paint nozzle clogged
- Dirt on air cap or nozzle seat

Too much paint in the centre (Figure 11) caused by:

- Jet regulating valve
- Pressure too high
- Material to viscous
- Nozzle too large

Split spray pattern (Figure 12) is caused by:

- The atomizing air and fluid flow not being properly balanced

3.0 Spray Patterns Defects

To correct the defects (top or bottom heavy pattern, or heavy right or left side pattern) determine whether the obstruction is in the air cap by spraying a test pattern; then rotate the air cap half a turn and spray another test. If the defect is inverted the obstruction is obviously in the air cap, which should be cleaned as previously instructed. If the defect has not changed its position the obstruction is in the fluid tip. When cleaning the fluid tip, check for fine burr on the tip, which can be removed with P1200 wet or dry sandpaper. To rectify defects (heavy centre pattern, or split spray pattern) if the adjustments are unbalanced re-adjust the atomizing air pressure, fluid pressure, and spray width control setting until the correct pattern is obtained.

Trouble	Cause	Remedy
Spray Jet Fluttering	Insufficient Material	Refill Cap
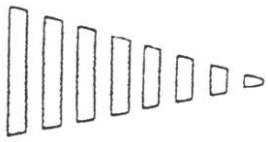	Loose Nozzle	Tighten Parts
	Loose Stuffing Box on Needle	Tighten Parts
	Nozzle Seat Contaminated	Clean

Spray Pattern Testing

There are four elements to look for:

- Pattern size
- Pattern shape
- Material distribution
- Atomisation

Correct Spray Pattern

4.0 Choose a Suitable Spraying Cycle.

4.1 Spraying Technique for Edge-to-Edge Painting

What is the proper spraying sequence and technique for refinishing applications?

Difficult areas such as corners and edges should be sprayed first. Aim directly at the area so that half of the spray covers each side of the edge or corner. Hold the gun an inch or two closer than normal, or screw the spreader adjustment control in a few turns. Either technique will reduce the pattern size. If the gun is just held closer, the stroke will have to be faster to compensate for a normal amount of material being applied to the smaller areas.

When spraying curved surfaces try to keep the gun perpendicular to the surface at all times, this may not always be physically possible, but it is an ideal that you should strive for, as it produces a better, more uniform finish.

After all of the edges and corners have been sprayed, the flat or nearly flat surfaces should be sprayed.

Curved Surfaced Wing

4.2 Spray Gun Angle and Distance

How should the spray gun be held?

It should be held so the pattern is perpendicular to the surface at all times, keeping the gun approximately 8 inches from the surface being sprayed. A simple method of determining the proper distance is shown below.

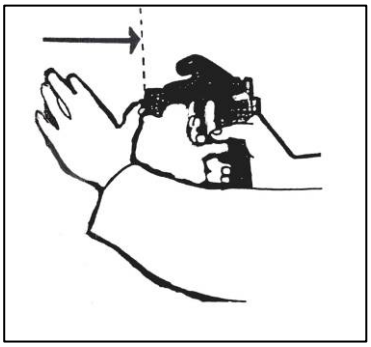

Figure 13: Proper Spraying Distance

What is the proper technique for spray gun stroke and triggering?

The stroke is made with a free arm motion, keeping the gun at right angles to the surface at all points of the stroke. Triggering should begin just before the edge of the surface to be sprayed is in line with the gun nozzle. The trigger should be held fully depressed and the gun moved in one continuous motion until the other edge of the object is reached. The trigger is then released, shutting of the fluid flow, but the motion is continued for a few inches until it is reversed for the return stroke. The trigger is again fully depressed and the motion continued across the object.

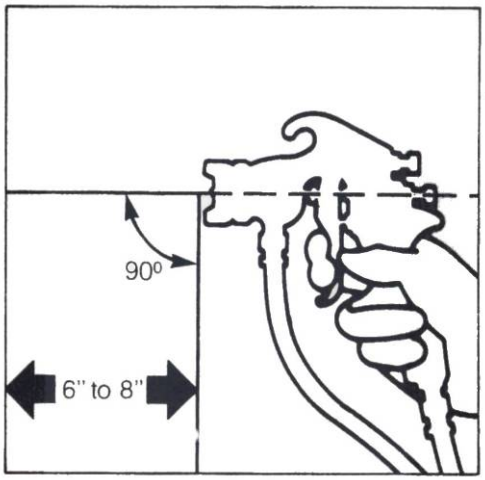

Figure 14: Correct at 90º

The spray gun is held at right angles to the work surface and moved at a uniform speed and a uniform distance from the surface. It should never be swung in an arc from the wrist to elbow – except when carrying out fade out repairs.

When the gun is arced

Arcing the gun results in uneven application and excessive overspray at each end of the stroke. When the gun is arced 45° away from the surface approximately 65% of the material is lost.

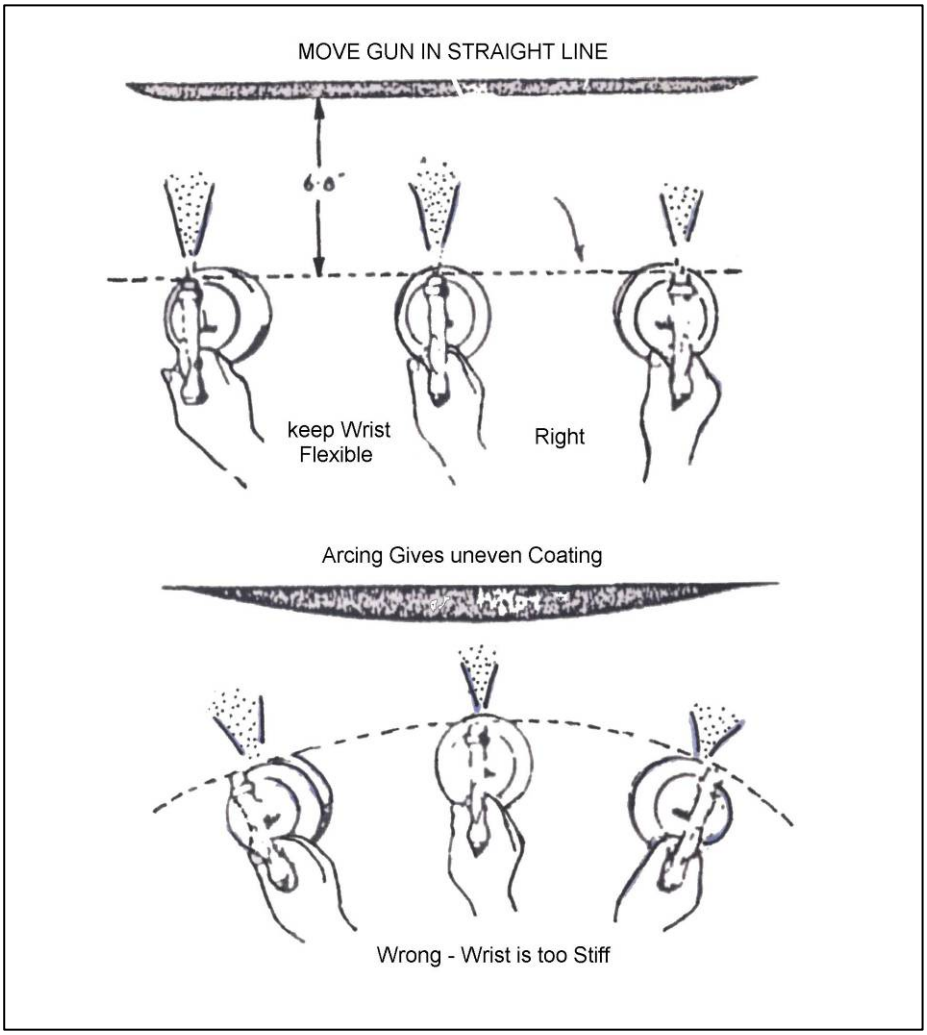

Figure 15: Hand Movement

4.3 Spray Gun Angle and Distance

Spray gun held too close may lead to:

- Orange peel
- Runs and sags
- Stripping of metallics

Spray gun held too far away may lead to:

- Orange peel
- Dry spray

Incorrect gun set-up:

- Large fluid nozzle with low capacity air cap will give runs and sags.
- Small fluid nozzle with high capacity air cap will give dry spray.

Incorrect Spraying Technique:

- Fan width too narrow – striping of metallics.
- Gun not held at right angles to the work surface – striping of metallics.

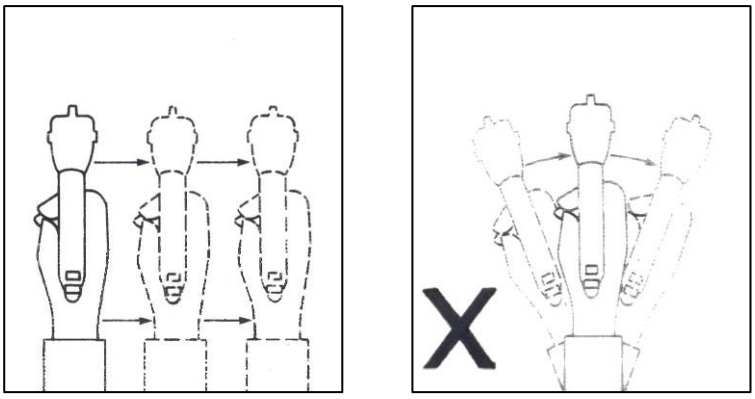

Figure 16: Incorrect Spraying Technique

Overlap

Lap each stroke 50% over the preceding one. Less than 50% overlap will result in streaks on the finished surface. Move the gun at a constant speed while the trigger is pulled, since the material flow at a constant rate. A 50% overlap will give you uniform coverage.

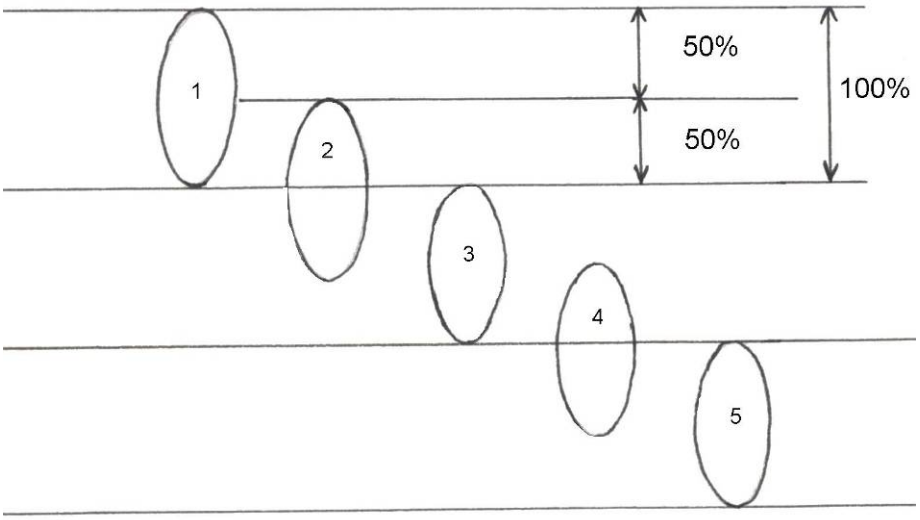

50/50 Spray Pass Overlap

Figure 17: 5 Gun Passes

The triggering of the gun is very important. The length of each horizontal stroke is from 18 to 36 inches (450-900mm) approximately, or whatever the sprayer can manage comfortably. The picture below shows the method of overlapping with the panel being sprayed in separate sections, each section overlapping the previous one by about 4 inches (100mm). When spraying level surfaces such as car roofs and bonnets, always start on the near side and work to the far side to re-dissolve any overspray. A certain amount of gun tilting is usually unavoidable when reaching across a car roof and overspray is thus created.

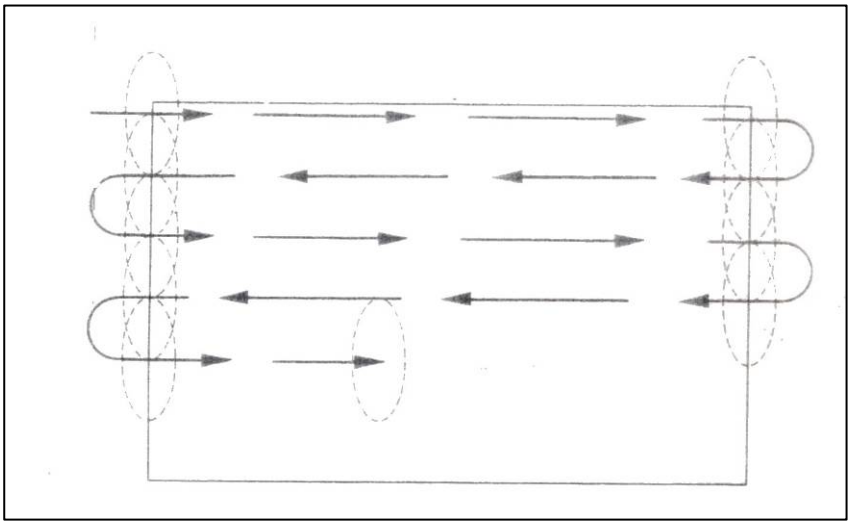

Figure 18: Spraying Techniques

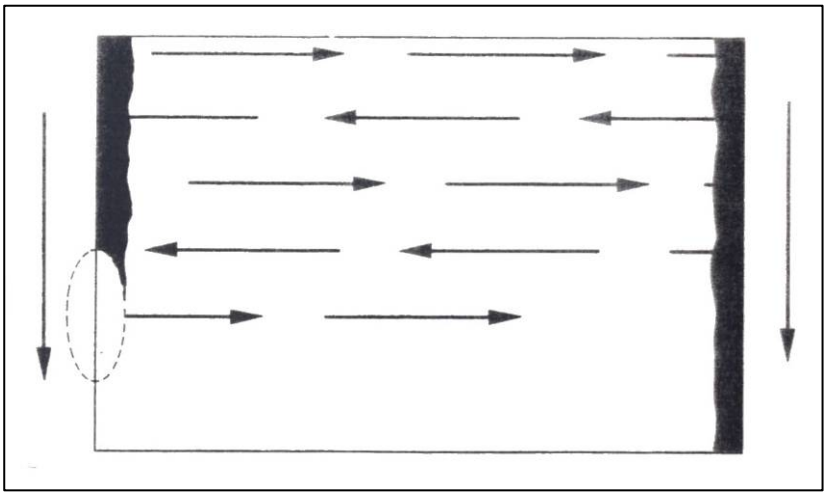

Figure 19: Spraying Techniques

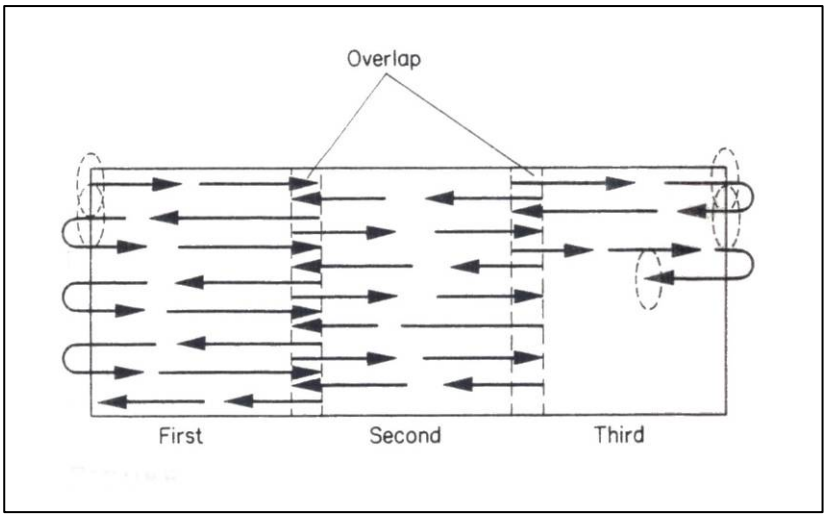

Figure 20: Spraying Techniques

Spraying Internal Corners

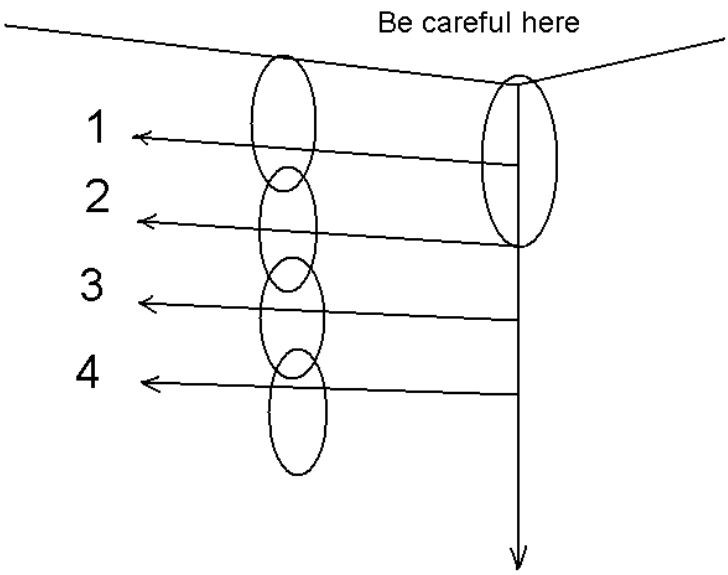

Figure 21: Spraying Internal Corners

Internal corners on rear of panels

4.4 Spraying Curved Surfaces

As previously stated, the gun should be kept at right angles to the surface and as near a constant distance from it as possible.

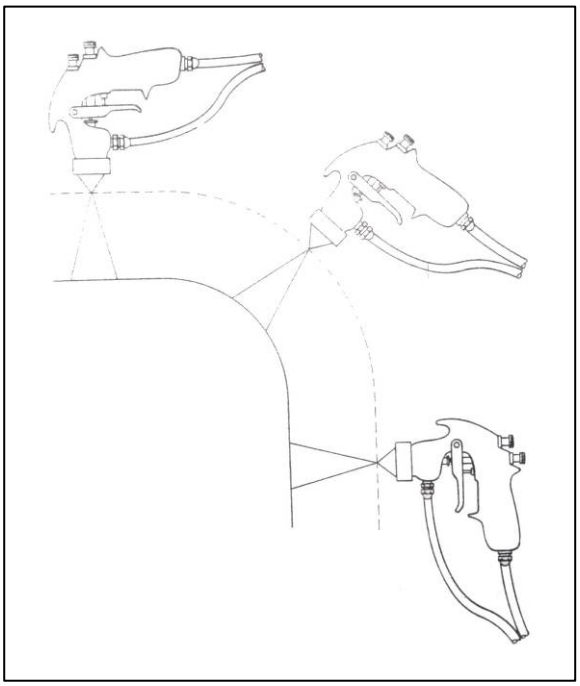

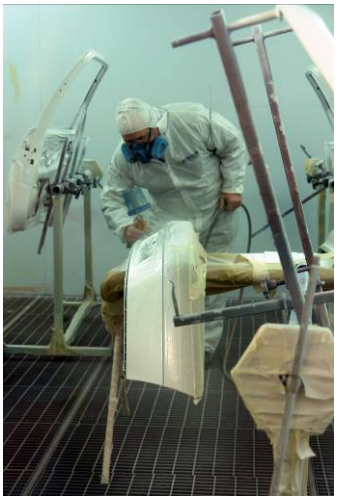

Figure 22: Spraying Curved Surfaces

4.5 Spraying External Corners

Figure 23 shows the method of spraying the edges and corners of a panel, the centre being sprayed like a plain panel. Also shows the technique used to paint vertical corners, the point to watch being to half trigger the gun to avoid applying too much paint.

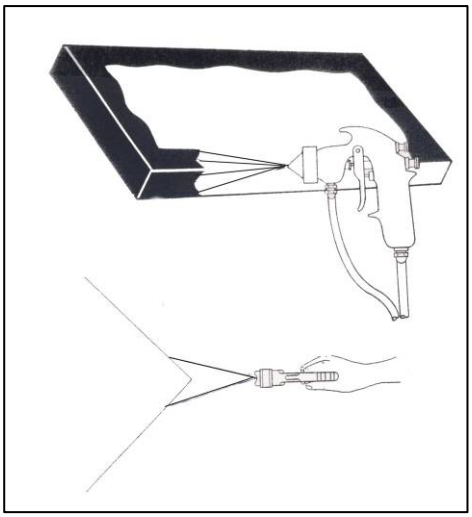

Figure 23: Spraying of External Corners

5.0 Choose a Suitable Spraying Cycle

What types of coats applied for refinishing?

There are three basic types of coats: tack coats, full wet coats and mist coats. The tack coat allows the application of heavier wet coats without sagging or runs. This is a light covering coat applied to the surface and then allowed to flash until it is just tacky, which usually takes only a few minutes. The finish wet coats are then sprayed over the tack coat.

A full wet coat is a heavy glossy coat that is applied in a thickness almost heavy enough to run. It requires skill and practice to spray such a coat.

A mist coat is sometimes required for final metallic colour matching. While its application is similar to applying a tack coat, the composition of the finish is usually different. There will usually be instructions for mixing and applying the mist coat furnished by the paint manufacturer.

Single and double coat

A single coat is simply one pass of the spray gun. A double coat consists of two passes of the spray gun. (A cross coat is a double coat of which the second pass is applied at right angles to the first). It is usually accomplished by painting an area, such as a wing or a door, and then immediately painting it again before moving on to the adjoining panel.

Flash off periods

Between the application of each coat of paint, time must be allowed for a solvent to evaporate. Failure to allow adequate flash off time will result in an excessive amount of solvent remaining in the paint system when the work is complete. This is often the cause of paint failures.

The paint manufacturer's instructions will apply to average working conditions. An allowance must be made when paint shop and/or climatic conditions are abnormal. If conditions are cold and damp, or if the air movement is poor, the flash off time needs to be increased. In hot, dry air conditions, or if the movement of air is high, a shorter flashing off period may be adequate.

It is most important to allow an adequate flash off time when force drying with infra-red lamps, or in a low stoving oven: as excess solvent in the paint film may boil if heat is applied too soon.

Spot Spraying

Spot repairs are recommended only where a complete panel repair is unjustified, being either uneconomical (size of repair, amount of masking involved), or impractical (difficulty of rendering the repair invisible, particularly in the case of metallic finishes).

Local repair techniques are examined under the chapter of that name, the method of preparation for all systems is as follows:

1. Carefully feather-edge the damaged areas and finish off by wet flatting with paper not coarser than P500 grade.

2. Etch prime bare metal.

3. Build up using lacquer primer surfacer. Apply with a circular motion of the spray gun working from the centre outwards, allowing each coat to slightly overlap the previous one.

Alternatively: Apply in short strokes from the centre outwards. Again extend each coat so that it lightly overlaps the previous one.

NOTE:

When spot repair work is carried out using a normal high capacity spray gun, the spray pattern should be narrowed and the fluid delivery reduced by adjusting the spray gun controls. To minimise overspray the air pressure should be reduced, but never be reduced to a completely round jet, otherwise both paint control and overlapping of passes become difficult.

Spot Repair of Straight Colours

1. Wet sand surfacer with paper not coarser than P600 grade wet or dry abrasive paper.
2. Wipe clean.
3. Remove all overspray of the primer surfacer from around the surrounding area, and at the same time improve the feather edge of the primer surfacer by wet flatting with P1200 grade paper, and compound a further 3-6 inches around the repair area.
4. Clean off.
5. Spirit wipe. Tack rag wipe.

6. Apply colour coats, extending each coat beyond the previous coat but keeping within the compounded area. Extra thinner may be added for the final coat. The paint may be applied by moving the gun in a circular motion or by short strokes from the centre of the repair to the perimeter.
7. As soon as possible after application of the final colour coat mist, coat the edge of the repair with Fade Out Thinner or a 10/90 mix of paint/thinner. This may be applied in several passes to achieve even wetting out.
8. Once hardened, burnish with rubbing compound and polish.

NOTE:

The polishing should be related to the gloss of surrounding original finish, e.g. in the case of repair of synthetic enamel with lacquer, too much polishing would produce a flat mirror-like spot surrounded by original finish of lower gloss.

A similar process can be applied to metallics and clear coat.

Fade Out Repair of Straight Colours

Especially useful when using synthetic enamel:

1. Wet sand surfacer with paper not coarser than P600 grade.
2. Wipe clean.
3. Extend flatted area further 3-4" (8-14cm) with P1200 grade paper.
4. Wipe dry.
5. Compound a further 9" (22cm) beyond the flatted area. Remove any overspray of the primer surfacer.
6. Clean off, spirit wipe, tack rag wipe.
7. Apply 2-3 single coats of colour to obliterate the surfacer. Air pressure should be 30-35 psi at gun (2-2$^{1/2}$ bars).
8. Add approximately 25% Fade Out Thinner to the paint. Reduce pressure to 20-25 psi at gun (1$^{1/2}$-2bars) and apply one or two fade out coats using a distinct arcing motion of the spray gun, but keeping within the compounded area.
9. As soon as possible after the application of the colour coats, apply Fade Out Thinner to the edge of the repair. This should be applied in several light passes at 35-40 psi at gun (2$^{1/2}$-3 bars).
10. Allow to harden. Polish.

NOTE:

With air-dry synthetic enamel polishing should be restricted to light burnishing with either polishing compound or liquid polish. Alternatively burnish with gentle pressure from a high speed lamb's wool mop.

In repair work using synthetic enamel or metallic paint, a general rule is "the less polishing required, the more successful the result". In other words, good application of the paint to give minimum dry spray, coupled with good mist coating to absorb that dry spray are the keys to success.

The success rate with fade out repair using synthetic enamel can be very high in selected areas, e.g. anywhere below the waist line of the vehicle, but repairs on horizontal areas tend to be more difficult.

Fade Out Repair of Metallic Basecoat and Clear Finishes

1. Wet sand surfacer with paper not coarser than P800 grade.
2. Wipe clean.
3. Extend Flatted area further 3-4" (8-14cm) with P1200 paper.
4. Wipe clean.
5. Compound a further 9" (22cm) beyond the flatted area. Remove any overspray from the primer surfacer.
6. Clean off, spirit wipe, tack rag.
7. Apply two coats basecoat to obliterate surfacer.
8. Reduce pressure to 20-25 psi ($1^{1/2}$-2 bars) at gun. Apply one or two fade out coats of basecoat using a pronounced arcing movement of the gun but do not trigger off at end off each stroke. The coats should well extend into but keep well within the compounded area.

NOTE:

Triggering off at the end of the spray stroke will tend to produce a silvery edge.

9. Mist coat the edge of the repair with Fade Out Thinner. This may be applied in several passes.

NOTE:

Operation (9) is optional, but a check on colour whilst the basecoat is still wet from the Fade Out Thinner will give a fairly accurate indication colour of the colour match. Any necessary colour

adjustment should be carried out before any application of the clear coat.

10. Flash off.
11. Apply clear coat, extending beyond the basecoat and fading out within the compounded area.
12. Mist coat edges of repair with Fade Out Thinner.
13. Allow to harden. Polish.

NOTE:

It may be advantageous to apply clear coat over the whole panel, in which case the necessary surface preparation will take place at operations (3), (4),(5) and (6).

6.0 Planning a Spraying Sequence before you Spray

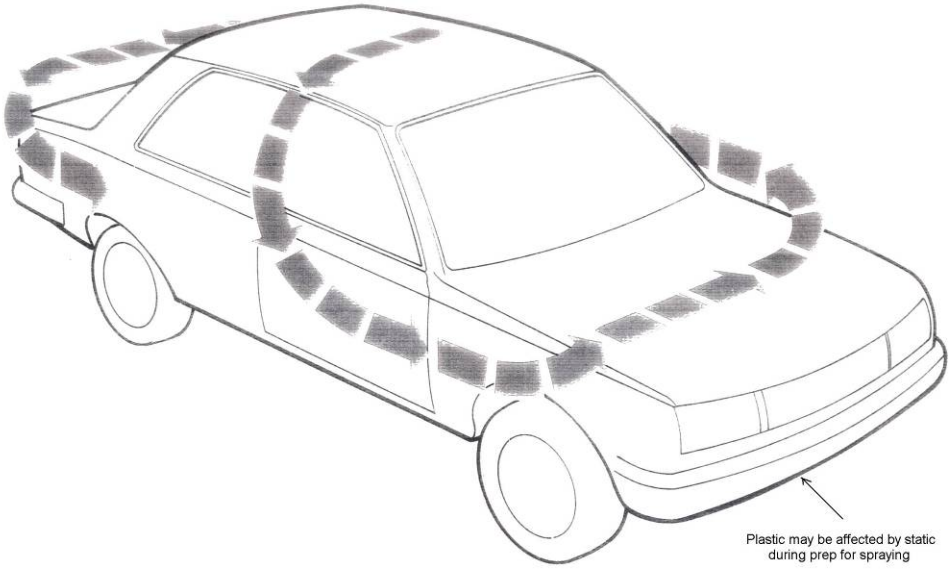

Figure 24: Spraying Sequence

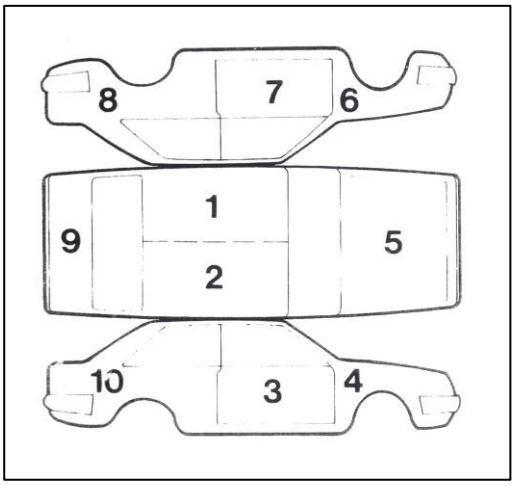

Figure 25: Spraying Sequence

Complete Resprays

A painting sequence should always be planned before the spraying starts. The aim is continuity, to eliminate dry overlap joins and to minimise unnecessary movement.

It is preferable to paint all inaccessible areas, such as boot and bonnet edges, channels and door shuts first. The doors should be

left slightly ajar, to prevent sticking and permit proper drying. This initial painting operation has the effect of laying the dust, which might otherwise blow out from these openings and spoil the exterior finish.

In spray booths where the air flow is from ceiling to floor the plan my be to paint the roof and pillars first, then working around the vehicle, starting from and finishing at an open door – thus avoiding a dry edge.

In booths with end to end extraction the car should face the incoming air. The spray sequence would be from front to rear of the vehicle, so that the overspray is pulled away from the wet freshly painted surfaces, particularly the important, eye catching, bonnet area.

The size and type of the vehicle may also influence the painting sequence.

When spraying small commercial vehicles, continuity can be achieved by painting the roof first, then working from an open rear door using vertical strokes.

This technique eliminates overlap joins on the vertical surfaces.

The overspray absorption time and the characteristics of the finish to be used should be considered when relating the type of paint to the size of the vehicle and to the number of operators required.

7.0 Spray Booth Operation

For safety reasons, the new EU Directive on Machine Safety demands strict compliance with precise performance standards:

- Mean downdraft in the spray booth 0.3 m/s on average, but at least 0.25 m/s at every measuring point in newly installed booths.
- Value in existing spray booths must remain below the lower explosion limit of 25%.
- The maximum solvent concentration at workplaces must remain below the threshold limit value (TLV) for compliance with the European Directive on Machine Safety, prEN 12215.

Even when these specifications are met, it is essential to wear an approved respiratory mask in order to avoid the risk of inhaling breathable paint particles and solvents.

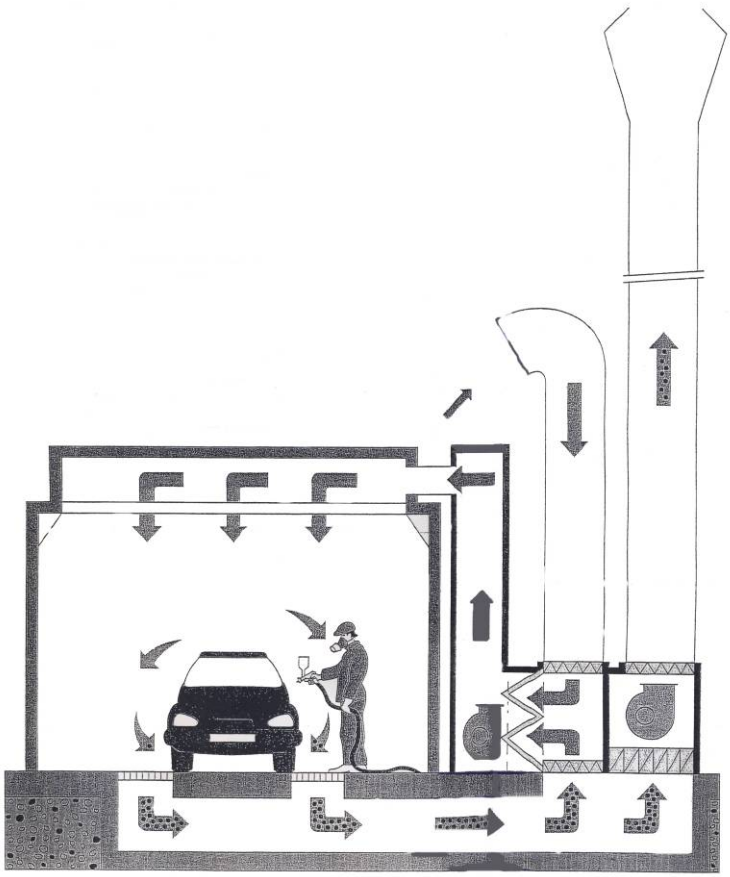

Figure 26: Spray Booth

7.1 Spray Booth Operation

Containing the overspray and keeping it out of the air and off other objects is an important consideration in a spray finishing operation.

What is a spray booth?

A compartment, room or enclosure, of fireproof construction such as metal, built to confine and exhaust the overspray and fumes resulting from spray finishing. There are various models available designed for different spray applications.

What are the benefits of a spray booth?

A well designed and maintained spray booth will provide a number of advantages. It will segregate the spraying operation from other activities, making both the spraying and other operations cleaner and safer. It reduces fire and health hazards by containing the overspray and fumes. It provides an area which is easier to keep clean, which means both the operator and the object being sprayed are likely to stay cleaner.

Ovens

These may be of two types:

(a) Separate from the spray booth
(b) Combined with the spray booth

Type (a) gives greater output; (b) is cheaper to install and requires less floor space.

Heating may be either by oil, gas or electricity.

Oil or gas fired ovens are usually heated indirectly, the fuel being burned in an enclosed heat exchanger. In electric installations, heating is by infra-red units mounted inside the oven to cover the horizontal bonnet, roof and boot panels.

Lighting should be of the flame proof fluorescent type or non-flame proof fluorescent behind armoured (wired) glass. It should be situated as vertical units along the walls of the booth.

Any oven should be fitted with an explosion relief panel situated in the roof or in a side facing away from any working area.

(Reference should be made to the relevant H&S information)

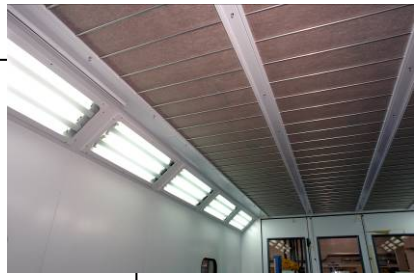

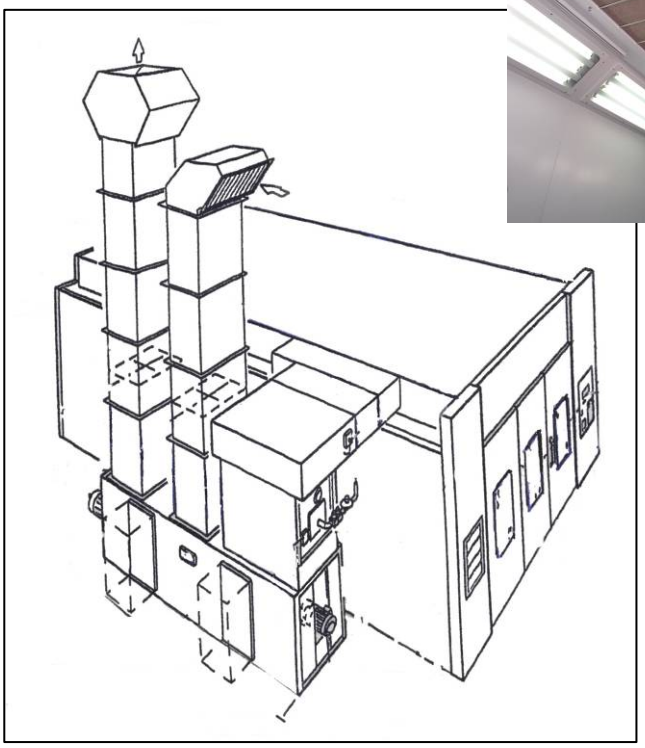

Figure 27: Ovens

8.0 Selection of Suitable Personal Protective Equipment

8.1 See mod 5 unit 1 Health and Safety

9.0 A Suitable Spraying and Baking Cycle on a Spray Booth

9.1 Spray Booth Operation

Spray Booths

Basic requirements

Any spray booth will function effectively provided the following basic requirements are met:

- Incoming air is heated
- Air flow is in the direction of the pull of gravity, i.e. from ceiling to floor.
- About 32,000 cubic feet per hour for water base paint.
- The extraction is uniform, i.e. the air flow gives an even fume extraction all around a car situated centrally in the booth.
- The booth may be un-pressurised negatively with the forces out at a slightly greater rate than it enters.
- In an un-pressurised booth it is essential that all doors are sealed 100% effectively to prevent dirt being drawn in when the extractor fans are running. Over-pressurisation should be avoided to prevent the discharge of paint fumes into the open shop.
- The intake air must be filtered.
- The extracted air must be filtered.
- Filters should be preferably of the disposable kind.
- The filters are normally situated in two positions – the primary filters before the input fan; the secondary filters after the input fan and in the spray booth ceiling.

- Extract filters are normally before the extract fans.
- The input air should be spread over as large an area as possible to reduce velocity and minimise turbulence. This can be achieved by inserting baffles immediately before the secondary filters.

Secondary Filters

Extract Filters

10.0 Spray Booth Operation

In many countries flame-proof motors, lighting and switch gear are a legal requirement.

Digital Read -out

Control Panel

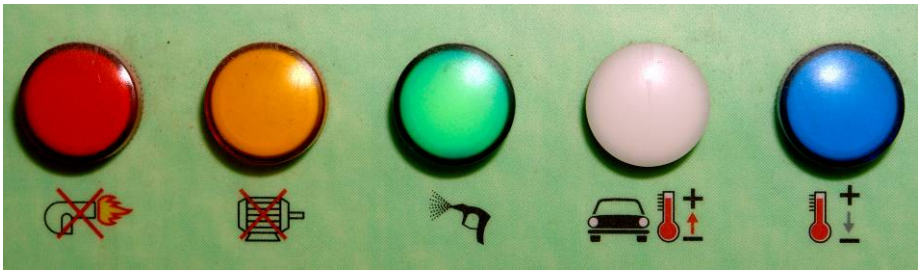

Function Warning Lights

Control Switches

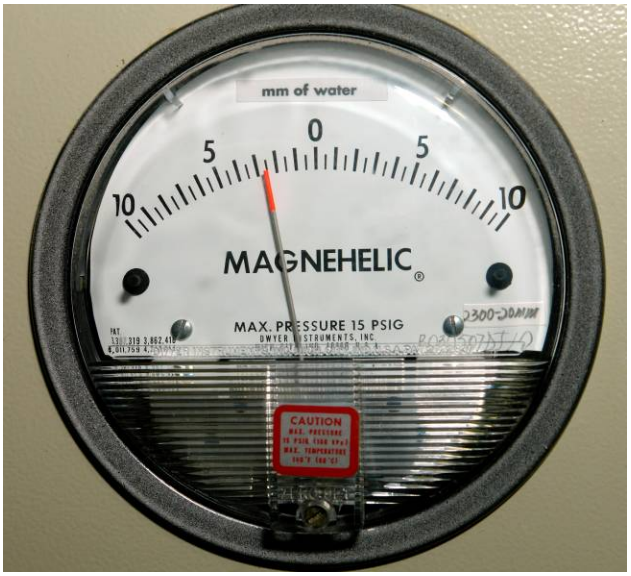

Manometer

A manometer is a gauge which indicates when paint arrestors or intake filters are overloaded. One gauge required for each bank of paint arrestors or filters.

Air must move through the booth with sufficient velocity to carry away fumes and overspray. Too low a velocity causes poor and even dangerous working conditions (especially when the materials contain toxic elements) and also increases maintenance costs. Too high a velocity is wasteful of power and the energy required to heat make-up air.

10.1 Maintenance

No spray booth or oven, however well designed, will function efficiently unless properly maintained. Good housekeeping is of prime importance.

What checks can be used to assure good results from a spray booth?

- Keep the interior of the booth clean.
- Maintain and replace filters when necessary – intake or exhaust filters.
- Caulk all seams and cracks where dirt might enter.
- Maintain and clean all equipment used in the booth.
- Operators clothing should be clean and lint free.
- Perform routine maintenance as outlined above.

Work/Preparation Bay

Inside Prep Work Bay

Work Bay Electrical Air Dust extraction

Work Bay Control Panel

11.0 Defects Which May Arise During the Storage of Paint

11.1 Bodying

(Fattening, jellying, livering)

The thickening of paint in the can.

Cause

- Loss of solvents.
- Oxidation or polymerisation.

Prevention

- Keep can tightly sealed.
- Store in a cool place.

NOTE:

Thickened lacquer paints can often be made usable again by addition of good quality thinner.

11.2 Gassing

A build up of pressure in the can of paint due to the formation of gas.

Cause

- Paint is very old.
- Chemical reaction between components.
- Storage conditions too warm.

Prevention

- Store paint in a cool place.
- Do not hold to large a stock of paint.
- Use in correct rotation.

11.3 Settling

(Caking)

The pigment moves to the bottom of the container.

Prevention

- Store in a cool place.
- Use oldest stock first.
- Invert container periodically.
- Do not store thinned paint.

NOTE:

Thinned paint will settle much faster than the un-thinned material due to its lower viscosity.

12.0 Identify Common Paint Faults

12.1 Bleeding

(Of red, maroon and yellow finishes)

Pigment from the original finish dissolves in the solvents of the refinish material and discolours it.

Cause

- Overspray from a colour prone to bleeding.
- Improperly cleaned equipment.
- Failure to seal off adequately the original finish.
- Contamination of undercoat with material prone to bleeding.

Prevention

- Do not allow spray dust from a colour which may bleed to fall on other jobs.
- Clean all equipment thoroughly.
- Test original finish before proceeding by applying a full coat of the colour to be used to a small flatted area. If bleeding occurs seal with a bleeding inhibitor sealer as directed by the manufacturer.
- Never mix other products into the undercoat.

Rectification

Bleeding sometimes does not occur until several coats of undercoat and finish have been applied. The complete removal of the affected paint and refinishing from bare metal is necessary.

Where bleeding occurs after application of an initial coat of undercoat or finish the fault can be sealed off with a coat of bleeding inhibiting sealer.

12.2 Dirt

Cause

- Inadequate or no filtration of spray booth and/or oven air.
- Spray dust allowed to accumulate on spray booth surfaces.

- Seams, channels, and crevices on vehicle not blown out.

- Inadequate or no filtration of compressed air supply.
- Vehicle not tack ragged prior to painting.
- Paint tin lids not replaced, allowing ingress of dirt.
- Operator's clothing shedding dirt, fibres and dust.
- Use of rusty or dirty containers for paints and thinners.
- High velocity air stream and turbulence in the spray booth.
- Concrete or other dust producing floors not sealed or dampened down.
- Inadequate filtration in direct fired, blown air, space heating equipment.
- Dry flatting, grinding, etc. carried out within the painting area.
- Use of poor quality masking paper e.g. newspaper.

Prevention

- General good housekeeping.
- Seal off dust producing surfaces.
- Thorough cleaning of the vehicle at all stages of the painting process.

Rectification

- Allow the finish to harden completely then wet flat with P1200 grade abrasive paper, and restore gloss with polishing compound.

- In the case of deeply embedded particles, flat and re-spray.

12.3 Blowing

(Bubbles spoiling the finish)

During low stoving or force drying, any air trapped under the paint in body filler, stopper, solder, body seams, glass fibre laminate, etc., expands and escapes through the paint film.

Causes

- Poor knifing technique when applying body filler.
- Deep application of body filler not sealed off.
- Stone chips and scratches not feather edged adequately.
- Damaged seams not re-sealed.

Prevention

- Use a good knifing technique when applying stopper. Do not allow the knife to be used at an acute angle to the surface – this causes the material to roll under the knife, forcing air bubbles in.
- Seal body filler with a thin skim of stopper before undercoating.
- Feather edge all damaged areas adequately.
- Inspect and reseal damaged body seams.

Rectification

Strip to bare metal, use a phosphoric acid metal cleaner and conditioner, refill and repaint.

12.4 Blushing

A milky dulling of lacquer finishes appearing at the time of application during highly humid conditions. The condensation of atmospheric moisture precipitates the components of the paint film when the surface temperature is lowered by fast evaporating solvents.

Blushing is often mistakenly referred to as "blooming". Refer to the glossary at the end of this book.

Cause

- Excessively humid conditions.
- Use of poor quality thinner.
- Thinner is too fast.
- Cold droughty paint-shops.
- Poor air movement and lack of heating in spray-booth.

Prevention

- Ensure paint-shop/spray-booth is adequately heated.
- Use good quality thinner.
- Add retarder to thinner. Use the minimum amount required otherwise the drying will be considerably slowed down.
- Use slower thinner.

Rectification

- Slight Blushing – allow to harden and remove the defect by polishing with polishing compound.
- Severe blushing – spray the area with a slower or retarded thinner.
- In extremely severe cases, when water droplets are entrapped in the finish, allow to harden, wet flat thoroughly and re-spray.

NOTE:

When blushing is seen on the colour coat, lacquer undercoats may have suffered from the effect of condensation. This may not be visible because undercoat surfaces are normally matt, but blistering of the paint system or inter-coat adhesion failure may occur later.

12.5 Cissing

(Cratering, fish eyes, saucering, crawling)

Paint repelled by contaminant forms crater like depressions. These may vary in depth, density and size (from pinhole size up to 1cm in diameter, and inspection with low powered lens may reveal a small impurity at the base).

Cause

- Contamination of surface by wax or silicone polish, oil or grease.
- Contamination by residue of soap, detergent, or metal pre-treatment products.
- Airborne contamination of the surface prepared for painting, or of the wet finish by:
  - **(a)** Overspray of different paint type
  - **(b)** Oil in the compressed air
  - **(c)** Overspray or dry spray of paint containing anti-cissing additive (silicone oil type)
  - **(d)** Aerosol packed anti-squeak and release agents.
  - **(e)** Dry polish residues.
- Airborne contamination (e.g. from an adjacent factory site), of the surface prepared for painting or of the wet finish.
- Incorrect type of air or fluid hose.

Prevention

Ensure all surfaces are thoroughly cleaned before any operation. (Use a solvent based water-miscible cleaner or mild detergent. In severe cases, use water-miscible cleaner in flatting water.)

Ensure that any operations involving the use of silicone products are carried out in a building separate from the paint shop.

Rectification

Remove the affected paint and re-spray.

NOTES:

- Use a recommended mineral oil for lubrication of the compressor.
- Be sure that oil and fluid hoses are suitable. Silicone contamination has been traced to hoses not specifically manufactured for spray painting.
- The use of silicon-containing additives to prevent cratering is not recommended. These additives contaminate the paint shop and other work around can also lead to future adhesion failure.

12.6 Dry Spray

Paint arriving on the surface in a powdery, friable condition.

Cause

- Spray gun held too far from surface.
- Spray gun moved too quickly over surface.
- Use of cheap thinner.
- Air pressure too high.
- Thinner too fast.
- Viscosity not correct.
- Incorrect spray gun setup – use of small fluid nozzle with high capacity air cap.
- Spraying in turbulent air or draught.
- Spray-booth temperature too high.

Prevention

- Use good spraying technique.
- Use good quality thinner.
- Use correct air pressure.
- Thin to correct viscosity.
- Add retarder if conditions are hot and dry, or use slower thinner.
- Use correct spray gun setup.
- Avoid turbulent air movement.

Rectification

Undercoats: Remove by washing off with thinner and rag, or allow to harden and remove by flatting.

Finishes: Dry spray of the final coat may be removed by flatting with P2000 grade abrasive paper, and the gloss restored by using a polishing compound.

It will be necessary to flat and re-spray in the case of "single-layer" metallic finishes.

12.7 Floating and Flooding

(Mottling, shadowing)

The term "floating" is used to describe a non-uniform colour change in the surface of a paint film, e.g. in brush applied finishes a pigment float may follow the line of the brush marks. In spray applied metallic finishes, black edges may be seen in areas of high film thickness.

The term "flooding" is used to describe a uniform colour change over the whole surface of the paint film, e.g. if a brush applied paint film is allowed to dry for a few minutes a section which is then brushed over may show a different colour difference may be seen between film sprayed at very low and at very high atomising air pressures.

Cause

- Floating defects are the result of applying heavy wet films.
- Flooding defects are more common in brush application, and are usually the result of "working" the paint after the initial setup has occurred. In spray finishing, extremes of air pressure may cause slight colour differences.

Prevention

- Avoid heavy wet coats. With metallic finishes particular care must be paid to spray technique, paint viscosity and atomising air pressure.
- In brushing, particular care should be taken around screw heads, etc. to avoid the development of runs which may show float lines.
- Avoid extremes of air pressure.

Rectification

- If the film is still wet, application of a further thin coat of colour may rectify the defect.
- Allow the affected area to harden. Flat and repair using the correct spray or brush technique.

12.8 Industrial Fall-out

Cause

In industrial areas, minute particles of grit or ash from factory chimneys can settle on a paint film, and adhere to or become embedded in it. The particles are rough to the touch, and can look unsightly: so while this condition is not strictly a paint work defect as such, it does call for the proper rectification.

Rectification

- Light contamination, when the particles are not embedded in the surface, can be removed by compounding and polishing.

- Heavy contamination can only be removed by a chemical wash using a 10% solution of oxalic acid (2oz oxalic acid to one pint of water) (54g to ½ litre).
  Wash down with water.
  Apply oxalic acid solution to affected areas, taking care to prevent the solution running behind mouldings. It is important to keep the surface wet and active by several applications of the solution, for about 15-20 minutes.
  Thoroughly wash off all traces of the solution by hose.
  Dry off.

NOTE:

Oxalic acid is a poison. All contact with skin and eyes must be avoided. Wear chemical goggles and PVC gloves. In the event of contact with the skin, wash immediately with plenty of water. If the clothing is contaminated, wash the contaminated clothing thoroughly before wearing it again.

12.9 Loss of Gloss

The gloss of a paint finish is assessed by the sharpness of an image reflected in it. A smooth paint surface has a high gloss and gives a sharp reflection. Any loss of gloss is due to the formation of irregularities in the surface, and a consequent excessive scattering of light and loss of sharpness of the reflected image.

Cause

- The gradual breaking up of the paint film under exposure to the weather leaves a powdery layer in the surface. This defect is known as chalking in white or pale colours, and as bronzing in deep blues and maroons.
- The initial onset of checking may not be visible to the naked eye, but can give sufficient surface irregularity to cause a loss of gloss. Examination with a magnifying glass will identify the checking pattern.
- Humidity blistering can be severe with a size of a blister barely visible to the naked eye. This is known as "micro-blistering" and will generally be identified first as a loss of gloss. Examination with a magnifying glass will show a large number of very small blisters.
- Colour sinkage on drying into an undercoat defect such as dry spray or coarse flatting marks. Heavy coats of lacquer

applied over an old thick absorbent paint system may not show sinkage and loss of gloss for several days.

Prevention

See relevant sections on Causes 1, 2, 3 and 4.

Rectification

Polish, using a liquid polish, polishing compound or rubbing compound according to the degree of loss of gloss. If polishing does not restore the gloss, look closely for checking or micro-blistering, and rectify, using the procedures given under Checking and Blistering.

12.10 Low Gloss

Cause

- Use of cheap or incorrect thinner.
- Poor hold out of undercoat (see sinkage).
- Contamination of surface before painting.
- Over-atomisation due to high air pressure and/or low viscosity.
- Poor spray booth extraction or inadequate air movement allowing overspray to dry and fall on the painted surface.
- Paint dries in the presence of vehicle exhaust or industrial fumes.
- Foul atmosphere in low bake oven.
- Poor drying conditions – low temperatures, high humidity, lack of ventilation.

Prevention

- Use correct good quality thinner.
- Thoroughly clean surface before painting.
- Thin paint correctly.
- Use correct air pressure.
- Ensure spray booth extraction is adequate.
- Keep paint-shop warm and dry.

- Avoid build-up of foul air in oven, by ensuring adequate "bleed off" and fresh air "make-up", and by using correct fuel if oven is direct fired.

Rectification

1. Allow film to harden and restore gloss with a polishing compound.
2. If contamination is suspected, strip to bare metal, use a phosphoric acid metal cleaner and repaint.
3. If low gloss is due to fine over-spray in the surface, allow the film to harden, flat with P1200 grade abrasive paper, and polish with a polishing compound.

In severe cases it may be necessary to flat the affected surfaces and re-spray.

12.11 Poor Adhesion

(Poor bond)

Loss of adhesion will usually be noticed in the paint-shop when masking tape is removed.

Cause

- Contamination of surface before painting, with wax, silicone, oil, water, rust, solder flux, tallow, soap, detergent, stearate powders from abrasive papers or discs, flatting residues, engine exhaust products, etc. These contaminants may come from many sources such as vehicle fuels, polishes, compressed air, paint shop heating too hot installations, road surfaces and industrial effluents.
- Use of incorrect undercoat for either the metal or the topcoat.
- Inadequate or no flatting.
- Dry application of the undercoat.
- Primer allowed to harden several days before further processing.
- Use of cheap thinner, incorrect thinner, or under-thinning
- Improper use, or no use at all of phosphoric acid pre-treatment material and etch primer.
- Masking first colour of duotone system before it has dried adequately.
- Allowing colour to dry to far before removing the tape.

Prevention

- Ensure surface is thoroughly clean before painting.
- Use correct recommended undercoat.
- Flat adequately.
- Good application of undercoat, avoiding dry spray, dry overlaps, spraying over loose over-spray deposits. Check that the metal temperature is not too high.
- Use good quality approved thinner.
- Apply at correct viscosity.
- Clean metal properly.
- Re-coat primer within manufacturer's specified period.
- Correct cleaning and pre-treatment of metal.
- Mask and damask at suitable times.

Rectification

- Strip to bare metal, use of phosphoric acid metal cleaner and repaint.
- When loss of adhesion is due to faulty masking technique, flat and feather edge the affected area, and re-spray.

12.12 Popping

(Bubbles spoiling the finish – see Blowing)(Cissing)

Often incorrectly judges to be due to the formation of solvent vapour bubbles in the wet paint film (hence "solvent pop"). Popping is usually the result of air bubbles, trapped during the application of the paint, being unable to escape because of quick film setup.

Cause

- Hot dry conditions and/or excessive air movement.
- Air pressure too low.
- Insufficient flash off time between coats.
- Application of excessively thick films.
- The application of heat too soon after painting.
- Heat source too hot or too close to surface.
- Use of cheap thinner. Use of incorrect thinner.

Prevention

- Use recommended thinner. Add retarder during hot/dry spells.
- Use correct air pressure.
- Do not apply thick coats and allow adequate flash of time between coats.
- Allow ample flash off time before stoving.
- Check oven temperature and adjust if necessary.
- Check metal temperature of vehicle in oven.

Rectification

As for pin holing

12.13 Poor Opacity

(Poor hiding, poor covering)

Original finish or patches of undercoat, etc. showing through the topcoat.

Cause

- Insufficient stirring of the paint.
- Overthinning.
- Use of excessively slow thinner, causing the paint to sag before a sufficiently thick coat is obtained.
- Use of cheap thinner. Use of incorrect thinner.
- Too few coats applied.

Prevention

- Stir paint thoroughly.
- Thin correctly.
- Use correct thinner.
- Apply correct number of coats to give required film thickness.

Rectification

Allow paint to flash off and then recoat, or allow to harden completely, wet flat and recoat.

12.14 Peeling

Peeling describes a condition when either the whole paint system or the colour coat only can readily be detached in large strips.

Cause

Any of the causes listed under Poor Adhesion can be responsible.

Prevention

See section on Poor Adhesion. In addition, avoid heavy wet coats of lacquer finish which give excessive shrinkage during the drying process, and loss of adhesion due to the forces set up during the shrinkage process.

Rectification

Strip to bare metal, use a phosphoric acid metal cleaner, and repaint.

12.15 Runs and Sags

An excessive amount of paint applied to a vertical or sloping surface fails to hold and drips or runs down the panel.

Cause

- Spray gun held too close to the surface.
- Spray gun moved too slowly.
- Incorrect spray gun setup. Use of large fluid nozzle with low capacity air cap.
- Air pressure too low.
- Viscosity too high or too low.
- Poor application conditions – lack of adequate air movement or warmth.
- Insufficient drying time between coats.
- Excessive use of retarder.
- Use of cheap thinner. Use of incorrect thinner.
- Spray fan width reduced without a compensating reduction in fluid delivery.
- Spray pattern distorted.
- Paint applied to contaminated/oily surface.

Prevention

- Use of the correct spraying technique.
- Use correct spray gun setup. Check that gun is functioning correctly.
- Check viscosity and air pressure.
- Raise temperature of paint shop.
- Avoid excessive use of retarder.
- Use of correct thinner or a faster approved alternative.
- Set spray gun correctly.
- Ensure thorough cleaning before painting.

Rectification

Allow to harden completely. Then wither wet flat using P1200 grade abrasive paper and polish, or wet flat using P500-P1200 abrasive paper and re-coat.

NOTES:

- If the underlying finish is soft after the initial flat, allow to harden through completely before continuing.
- If the sag is still wet and another coat can be applied, some success may be obtained by lightly stippling out the sag with a soft brush and re-spraying.

12.16 Rusting

Cause

- Water reaching the metal through breaks in the paint film.
- Failure to remove rust completely before painting. Particular attention should be paid to pitted areas.
- Contamination of the metal surface before paint is applied – finger marks, water allowed to dry naturally on the surface, delay in painting after using a phosphoric acid metal cleaner.

NOTE:

The likelihood of rusting is considerably increased when road surfaces are given a frequent dressing of salt during the winter months.

Prevention

- Remove all traces of rust prior to painting.
- Clean thoroughly and avoid contamination during refinishing.

Rectification

Strip to bare metal. Disc affected areas to give a clean, bright surface. Use a phosphoric acid metal cleaner and conditioner. Repaint.

12.17 Staining

Many substances if allowed to remain in contact with a paint film will cause surface staining. Examples are road tar, lubricating greases, hydraulic fluid, anti-freeze solutions, battery acid and synthetic and natural rubbers. Many agents are water soluble and will leach into the paint film.

Cause

Failure to remove the contaminants at the earliest opportunity, by water washing or petrol wiping as appropriate.

Prevention

Clean thoroughly and avoid contamination during refinishing.

Rectification

- Wash off using water and detergent, or petrol, as appropriate. Polish the affected area using liquid polish initially, and if required following with a coarser polishing or rubbing compound.
- In severe cases of long standing staining, when rubbing compound is not effective, well flat the affected areas until all traces of the staining are removed, and then re-spray.
- In very severe cases it may be necessary to strip and repaint.

12.18 Scratch Opening

(Scratch swelling, tramlining, sand scratches)

Flatting marks spoiling the finish.

Cause

- Heavy application of undercoat.
- Insufficient drying time allowed before the finishing coats are applied.
- Use of coarse abrasive paper.
- Inadequate drying of the first coats of colour before wet flat and final coat application.
- Colour on colour application when the original finish is soft, weathered or under-cured, and sensitive to paint solvents. (See under Crazing).

NOTES:

- Scratches made when abrasive particles from a dirty paint shop atmosphere are present on surface being flatted are often incorrectly judged to be due to scratch opening.
- Insufficient thickness of colour coat will give the appearance of scratch opening.

Prevention

- Do not apply heavy coats of undercoat.
- Allow sufficient drying time between all coats of paint.
- Use correct grade of flatting paper.

Rectification

Depending on the severity of the defect, either compound and polish; wet flat using P1200 grade abrasive paper and polish, or allow the finish to harden completely then wet flat and re-coat.

12.19 Sinkage

As drying proceeds, the finish loses gloss and eventually reflects underlying imperfections, showing the contours of stopper patches and metal scratches, etc.

Cause

- Excessively heavy application of any one or all of the materials in the paint system.
- Insufficient drying times between coats.
- Dry spraying of undercoats resulting in porosity.
- Body filler, stopper, cut through, etc. not sealed off.
- Highly pigmented undercoat not stirred each time before use.
- Use of coarse grade of flatting paper.
- Poor drying conditions – confined, cold, humid, unventilated.
- Under thinning of paint.
- Undercoat flatted before fully dry.
- Inadequate feather edging of colour coat will give the appearance of sinkage.

NOTE:

Insufficient weight of colour coat will give the appearance of sinkage.

Prevention

- Avoid applying thick coats, but do not spray dry.
- Allow adequate drying time between all coats.
- Seal off all areas of bodyfiller, stopper, rub through, etc. with primer surfacer.

12.20 Slow drying

Cause

- Excessively heavy application leading to skin drying and trapping of solvents in the paint film.
- Painting over wax, oil or grease contaminants.
- Poor drying conditions: confined, cold, humid, unventilated.
- Poor application conditions – lack of air movement and/or warmth.
- Insufficient drying times between coats.
- Excessive use of retarder.
- Use of cheap thinner. Use of incorrect thinner.

Prevention

- Thoroughly clean surface before painting.
- Avoid heavy thick coats.
- Improve both spraying and drying conditions – provide warmth and air movement.
- Allow sufficient drying times between coats.
- Thin correctly with approved thinner.

Rectification

- Generally slow drying may be overcome by moving the vehicle to an area with improved ventilation and temperature, or by the application of low heat. If the condition is due to extra heavy coats, wrinkling may develop unless great caution is observed in the application of heat.
- When slow drying is due to contamination neither improved drying conditions nor the application of heat will dry the paint film. In this case strip to bare metal, use phosphoric acid metal cleaner and re-paint.

12.21 Striping

(Of metallic finishes)

Depth of shade variations, showing every spray gun stroke.

Cause

- Inadequate overlapping of spray gun strokes.
- Defective spray gun pattern.
- Spray gun held too close to surface.
- Spray gun fan width too narrow, or fan width reduced with no compensating reduction of fluid delivery.
- Failure to hold gun at right angles to the work surface.

Prevention

- Overlap each spray gun stroke by at least 50%. (Overlapping by 67% is recommended for last coat of metallics). Use good spray technique.
- Overhaul, and adjust spray gun correctly.

Rectification

- Allow the finish to flash off and apply a further coat using correct spraying technique.
- Allow finish to harden off, then wet flat and re-spray.

12.22 Water Marking and Spotting

When a drop of water evaporates from a painted surface the outline of the drop may still be seen, and will not be removed by rubbing with a cloth. This is known as water marking. If a white spot remains this is known as water spotting.

Cause

- Abnormal weather conditions, when showers are followed by very strong sun.
- Exposure of the paint film to rain before it's fully hardened.
- Excessive application of wax.

Rectification

- If repeated heavy applications of wax polish are suspected, thoroughly clean off the old wax, using plenty of rag and white spirit. Polish, using a liquid polish initially, and following with coarser polishing or rubbing compounds, depending on the depth of the mark or spot.
- If repeated polishings are not effective, wet flat the affected area and re-spray.

NOTE:

In severe cases, the marks or spots may reappear some days after the polishing. Repeating the polishing operation once or twice more should finally rectify the defect.

13.0 Spray Gun Washing Procedure

Control Panel

Solvent Gun Washer

Inside Gun Washer

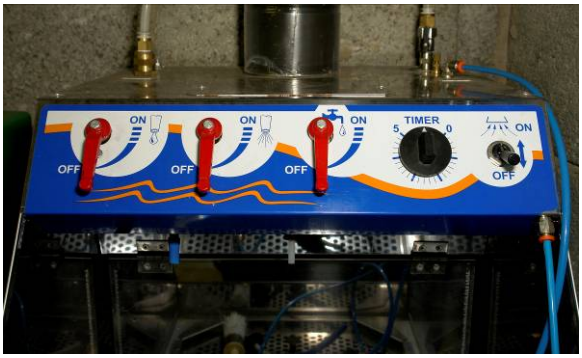

Control Panel

Water Gun Washer

Inside Gun Washer

Summary

When refinishing repaired car bodies, it's essential to follow certain rules if the result is to look professional. In all jobs connected with preparing substrates, speed is the name of the game. For good results, you must work within the time limits prescribed.

Properly prepared substrates: the foundations of success

The preparation of the substrate lays the foundation for everything else in almost all refinishing situations in the bodyshop, in particular for:

- New damaged or undamaged spare parts
- All kinds of car body repairs
- Scratches and rust etc.

Self Assessment

Questions – Module 5. Unit 6

1. What causes poor adhesion of primer?

2. What paint defect does silicone wax cause?

3. What primer should be used on bare metal substrate?

4. What does an air transformer/filter regulator do?

5. What does an in line air adjusting valve do?

6. Name the three parts that form the gun set up?

7. What shape should a spray pattern be?

8. What distance should the gun be kept from the work?

9. How much of an overlap must be maintained when spraying?

10. What safety precautions need to be observed when sanding?

11. What panels are most likely to be affected by static

12. Does the application of paint at excessive heat affect adhesion?

Answers to Questions 1-12. Module 5. Unit 6

1.

Poor preparation of the substrate

2.

Fisheyes

3.

A self etch primer

4.

It removes dirt, oil, moisture from compressed air

5.

It regulates air pressure at the spray gun

6.

Air cap, fluid tip, fluid needle

7.

Rectangular with rounded ends

8.

6"- 8" 150mm – 200mm

9.

50/50%

10.

Its time allowed between coats for solvent/water to evaporate

11.

Plastic bumpers

12.

Yes

Suggested Exercise

1. Prepare a pre-primed panel for topcoat application by wet flatting with P800 grade water paper. Pre-clean flatted panel with recommended degreaser and tack off. Apply two coats of two-pack acrylic solid topcoat. Cure at paint manufacturers specified baking temperature. Evaluate the quality of finish.
2. Prepare a pre-painted panel for basecoat application by DA sanding with P400 disc. Pre-clean flatted panel with a recommended degreaser and tack off. Apply two/three coats of a silver base coat. Apply a drop coat to achieve an even tone. Tack off and apply two coats of two pack acrylic lacquer. Cure at paint manufacturer's recommended baking temperature. Evaluate the quality of the finish.
3. Prepare a nonprimered plastic bumper for the application of plastic adhesion promoter. Preclean bumper with an anti-static degreaser and tack off. Apply a coat of adhesion. Promoter and allow to flash off. Apply two/three coats off basecoat and allow to flash off. Mix a suitable quantity of lacquer and add in the paint manufacturer's recommended quantity of plasticizer for the plastic substrate being painted. Cure at recommended temperature.

Instructions:

- Wet flat with P800 waterpaper a pre-primered panel
- Pre-clean and tack off panel
- Apply two coats of two pack acrylic solid topcoat
- Cure at recommended temperature

Tools and Materials:

- Spray booth
- Mixing room
- Painting tools
- Painting materials and sundries
- PPE's

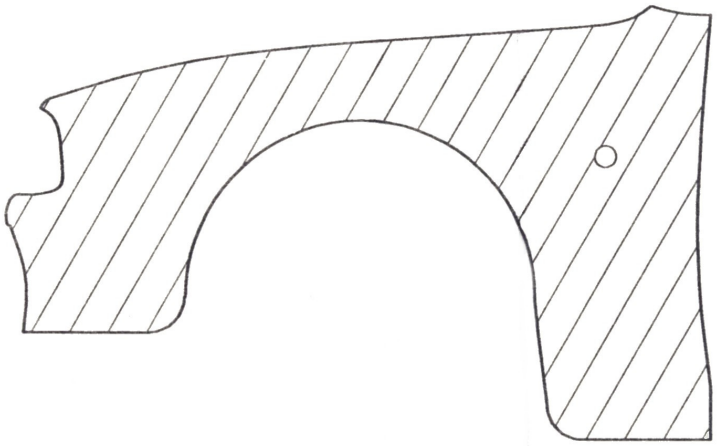

TWO PACK ACRYLIC SOLID COLOUR

Work carried out in a manner that is unlikely to cause injury to apprentice or colleagues. Preparation of panel and application of paint to paint manufacturer's specifications. Panel cured at paint manufacturer's recommended temperature.

Instructions:

- DA sand a pre-painted panel with P400 disc
- Pre-clean and tack off panel
- Apply two/three coats of silver basecoat
- Apply a drop coat to achieve an even tone
- Tack off and apply two coats of acrylic lacquer and cure

Tools and Materials

- Spray booth
- Mixing room
- Painting tools
- Painting materials and sundries
- DA sander with dust extraction
- P.P.E's

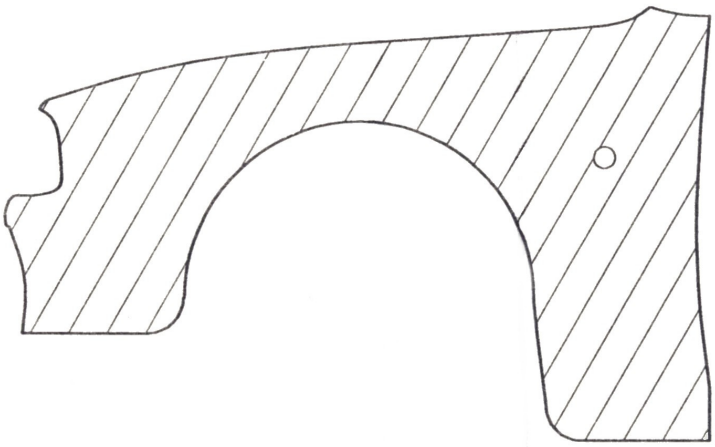

SILVER METALLIC CLEAR OVER BASECOAT

Work carried out in a manner that is unlikely to cause injury to apprentice or colleagues. Preparation of panel and application of paint to paint manufacturer's specifications. Panel cured at paint manufacturer's recommended temperature.

Instructions:

- Prepare plastic bumper for primer by DA sanding with scotch brite pad
- Pre-clean with anti-static degreaser and tack off
- Apply plastic adhesion promoter
- Apply two/three coats off basecoat
- Tack off and apply two coats of lacquer with relevant percentage of plasticizer included in the mix and cure

Tools and Materials:

- Spray booth
- Mixing room
- Painting tools
- Painting materials and sundries
- DA sander with dust extraction
- PPEs

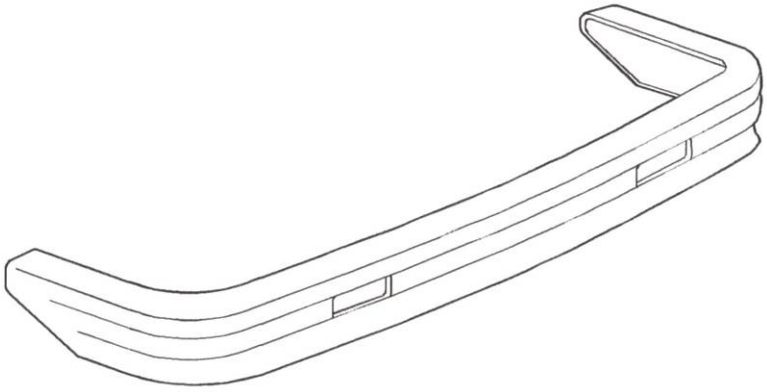

TWO PACK ACRYLIC SOLID COLOUR

Work carried out in a manner that is unlikely to cause injury to apprentice or colleagues. Preparation of panel and application of paint to paint manufacturer's specifications.

SOLAS

An tSeirbhís Oideachais Leanúnaigh agus Scileanna
Further Education and Training Authority

27-33 Upper Baggot Street
Dublin 4