Trade of Electrician

Standards Based Apprenticeship

Motor Control

Phase 2

Module No. 2.4

Unit No. 2.4.2

COURSE NOTES

Created by John Watters - Sligo TC

Revision 1 April 2000 by
John Watters - Sligo TC
Gerry Ryan - Galway TC

Revision 2 Sept 2006 by
Chris Ludlow - Dundalk TC

Revision 3. Feb 2008 by
Chris Ludlow - Dundalk TC

Revision 4. July 2009 by
Chris Ludlow - Dundalk TC

Revision 5, November 2013
SOLAS

Compiled by Liam Carroll – Certification & Standards

Published by

SOLAS
An tSeirbhís Oideachais Leanúnaigh agus Scileanna
Further Education and Training Authority

27-33 Upper Baggot Street
Dublin 4
Ireland

Table of Contents

TABLE OF CONTENTS 3
INTRODUCTION 4
CIRCUIT SYMBOLS 5
PANEL WIRING TECHNIQUES 6
TYPICAL MOTOR CONTROL INSTALLATION 13
DEFINITIONS 16
UNIT RELATED ETCI RULES 16
TERMINAL BLOCKS 17
PUSHBUTTONS, SWITCHES AND INDICATORS 17
RELAYS 21
CONTACTORS 23
AUXILIARY CONTACT BLOCKS 28
OVERLOAD PROTECTION 29
REASONS FOR OVERLOAD PROTECTION 32
MOTOR STARTER 33
DIRECT ON LINE STARTER 34
TYPES OF CONTROL 37
OVERLOAD SET UP 38
PROBLEM SOLVING TECHNIQUES 41

Introduction

Welcome to this section of your training course, which is designed to assist you the learner, understand the basics of how electric motors are controlled.

Objectives

By the end of this unit you will be able to:

- Recognise and use appropriate circuit symbols
- Use basic panel wiring techniques
- Select and use correct panel wiring cable
- Produce a basic motor control layout
- Understand the basic rules which apply to installing a motor
- Install flexible conduit
- Understand the operation and use of push-buttons
- Understand the operation and use of relays
- Understand the operation and use of contactors
- Understand the operation and use of auxiliary contact blocks
- Understand the operation and use of thermal overload units
- Understand the operation and use of indicator units
- Correctly set an overload unit to suit the motor protected
- Install a D.O.L. starter to control and protect a three-phase motor
- Install a D.O.L. starter to control and protect a single-phase motor
- Install a control circuit to provide Start / Stop operation
- Install a control circuit to provide Emergency Stop operation
- Install a control circuit to provide Auto / Off / Manual operation
- Install a control circuit to provide Sequential operation
- Install Power On, Motor Run and Overload Tripped indication
- Develop and interpret schematic diagrams for above circuits
- Locate and repair faults on above circuits

Reasons

The ability to understand basic motor control is vital as it is used in one form or another in every walk of life.

Circuit Symbols

The following are the circuit symbols commonly used in motor related schematic diagrams.

Terminal Strip	11 12 13 14	Neon Lamp	H
Start Button (spring return)	I S 3 4	Relay Contacts	K 13 21 33 43 14 22 34 44
Stop Button (spring return)	O S 1 2	Contactor or Relay Coil	K A1 A2
Non Automatic Return		Contactor Main Contacts	KM 1 3 5 2 4 6
Emergency Stop (Mushroom Head) (Latching)	O S 1 2	Normal Open Auxillary Contact on KM3	KM3 13 14
Selector Switch 3 Position	S 1 2 3	Normally Closed Auxillary Contact On KM4	KM4 11 12
Float switch		Resettable Thermal Overload Auxiliary Contacts	R F 95 97 96 98
Signal Lamp	H	Thermal Overload Relay Elements	F 1 3 5 2 4 6
Incandescent Signal Lamp	H X1 X2		

Note: The following symbol was developed by Telemecanique and is still in common use.

Telemecanique Resettable Thermal Overload Auxiliary Contacts	R 95 97 96 98

Figure 1

Panel Wiring Techniques

Electrical control panels are available in all shapes and sizes to suit the particular requirements of the situation. These panels may be small as shown in Figure 2, or very large as required to house the necessary components. They must of course provide the required level of protection from the prevailing conditions in the location.

Figure 2

The control equipment may be mounted in the panel in a number of ways as follows:

Drilled or Tapped Mounting Plates

Figure 3 illustrates a section of a drilled and tapped mounting plate. This mounting method can be costly unless large volume production is involved.

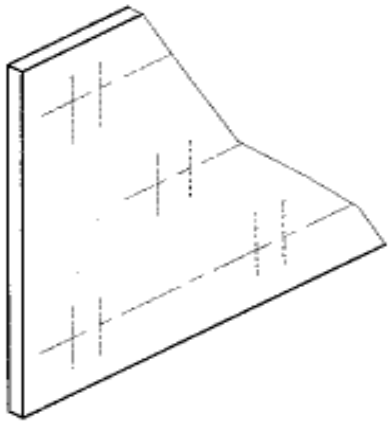

Figure 3

Slatted Mounting Screens

Figure 4 illustrates a section of slatted mounting screen. This mounting method suits any type of equipment and is quick and easy to assemble.

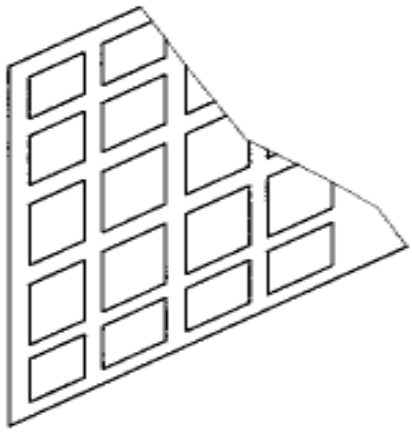

Figure 4

Mounting Rails

Mounting rails are made up of cold rolled steel. After being rolled, they are treated to prevent corrosion. Mounting rails are used for snap-on mounting of electrical equipment. A selection of mounting rails is illustrated in Figure 5.

Plain Top Hat	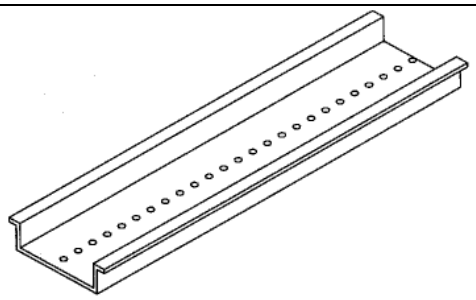
Slotted Top Hat	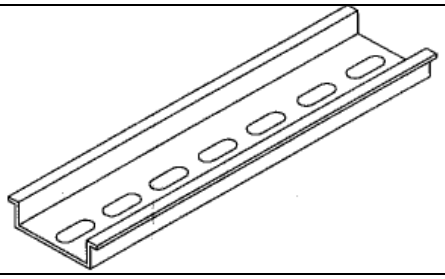
Slotted G. Rail	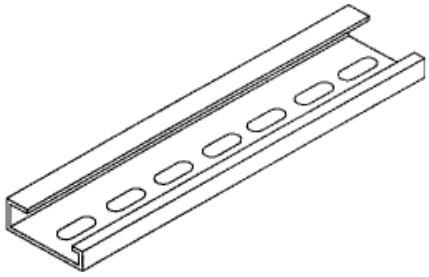
Plain G. Rail	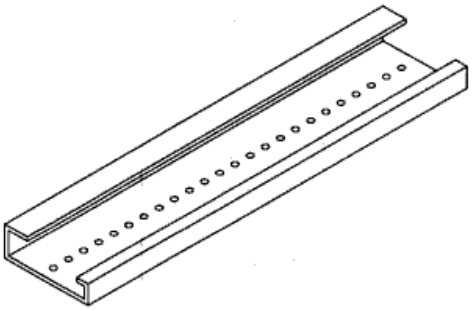

Figure 5

Note:
All these rails are supplied in 2 metre lengths.

Panel Wiring Cable

This is an insulated flexible cable without a sheath. It is generally run in slotted trunking with a clip on lid, inside a control panel. Panel wire is available as follows:

Type	Nominal C.S.A. in sq. mm
H05V – K	0.5 - 1.0
H07V – K	1.5 - 240.0

Note: For CENELEC Cable coding system see ETCI Rules

The following cable colours are available:
Brown; blue; green/yellow; black; green; grey; orange; pink; red; yellow; violet and white.

Crimp Connectors

A wide range of crimp connectors is readily available in both insulated and non-insulated types to suit any particular electrical application.

Figure 6 shows some of the crimp connectors in common use.

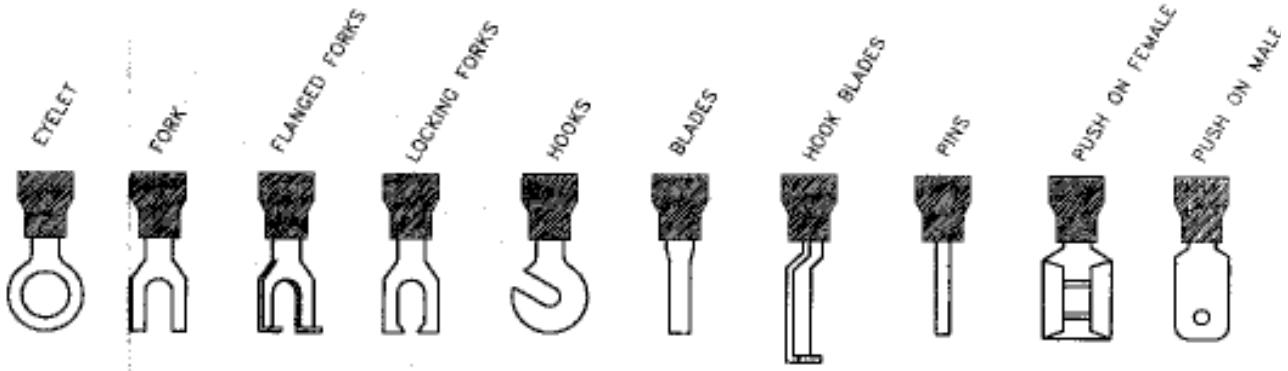

Figure 6

Figure 7 shows a typical ratchet type crimping tool used for the termination of **insulated** crimp connectors to cables. It is colour coded to indicate the size of crimp connector and matching conductor. Red for 1.5^2 mm, blue for 2.5^2 mm and yellow for 4^2 mm and 6^2 mm. **Some** of these tools require that the connector be inserted the **correct way round**. If this is not done, a **poor joint** between cable and connector will be the result.

Figure 7

Figure 8 shows a multipurpose tool. It features a cable cutter, sections for insulated and non-insulated crimp connectors as in figure 7. It has a cutter for the common size machine thread brass screws (2.6 mm to 5 mm) which allows screws to be cut clean avoiding damage to the start of the thread. It also has a wire stripper for cable sizes 0.75^2 to 6^2. The jaws must be fully closed to ensure correct pressure is applied to connector etc.

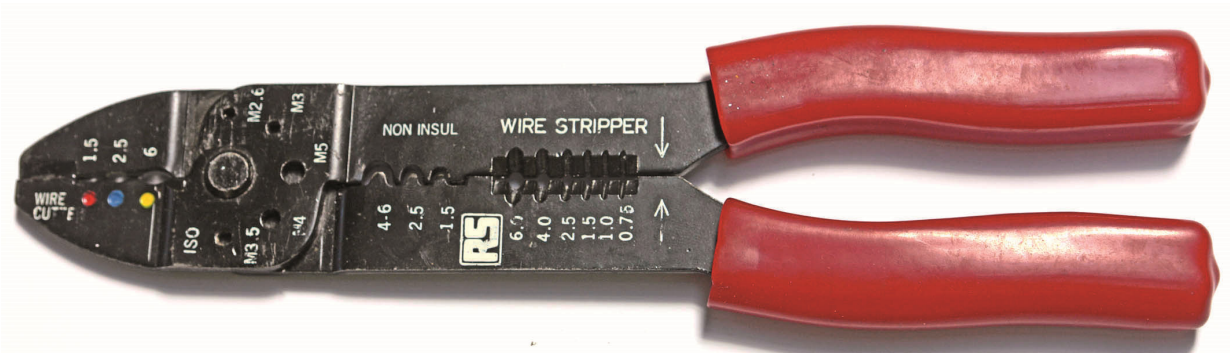

Figure 8

Panel Trunking

Figure 9 illustrates a section of PVC slotted trunking used inside electrical control panels to accommodate cable runs. It is available in 2 metre lengths and various widths and heights - for example it is available in sizes from 15mm wide x 17mm high to 100mm x 100mm. Divider walls can be inserted for segregated compartments. The lid is simply clipped on in place. Sections can be removed from the sides to allow cables enter or exit. The wiring can easily be altered or modified after initial installation. It is fast to install.

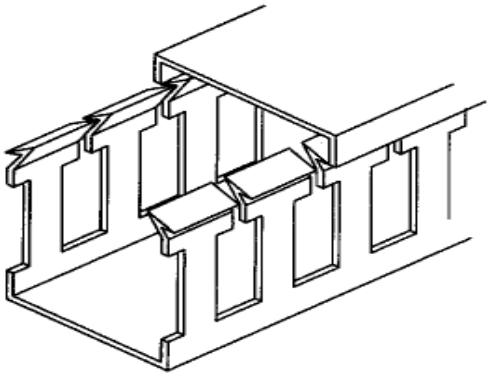

Figure 9

Cable Lacing

Figure 10 illustrates a section of cable loom formed using the cable lacing method. Cable lacing allows looms to be made up prior to assembly. This wiring method is very fast and cheap for high volume work. Cable ties or spiral cable wrapping may also be used.

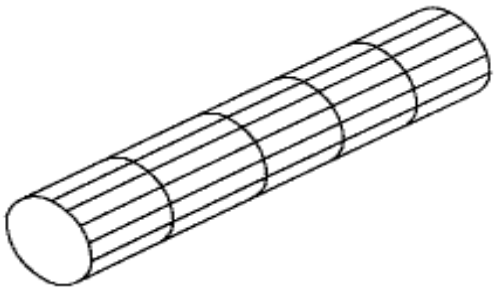

Figure 10

Wiring of Enclosure Doors

Figure 11 illustrates a typical method of wiring an enclosure door. The wiring between the main frame and the front panel should allow the door to open and close without undue strain on the wires. A loop clamped between two points is the usual method.

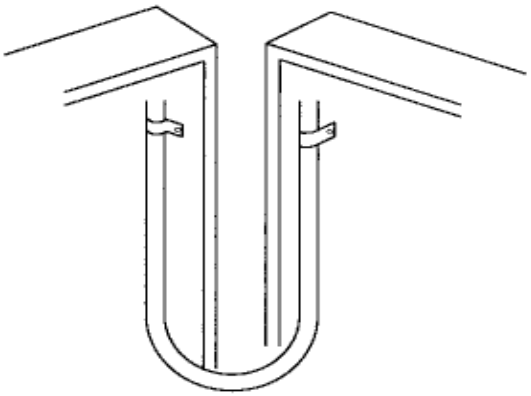

Figure 11

Figure 12 illustrates how wiring from the loop is usually cable tied or laced and then clipped to the door at convenient intervals. Flexible stranded cable should be used covered with an overall PVC sheath, e.g. spiral wrap.

Note: The door of a steel enclosure can be regarded as an exposed conductive part and therefore is required to be earthed. The metal hinge is not sufficient to meet this requirement.

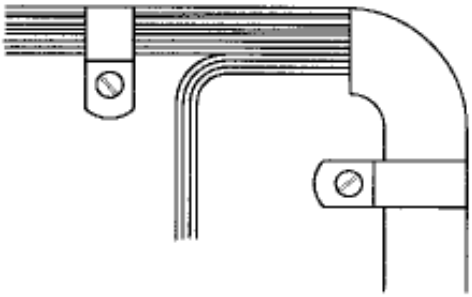

Figure 12

Identification Tags

Cable markers are used to identify cables, wiring systems etc. It is desirable that wiring shall be arranged or marked so that it can be identified for inspection, testing, repairs or alterations of the installation. One practical way of quickly and easily identifying panel wires (when trouble shooting etc), is by using cable marking tape. This marking tape, which is purchased in rolls with various legends, is simply placed in a dispenser, which cuts the tape to any length required.

Typical Motor Control Installation

Figure 13 illustrates a typical layout where the isolator is remote from the motor

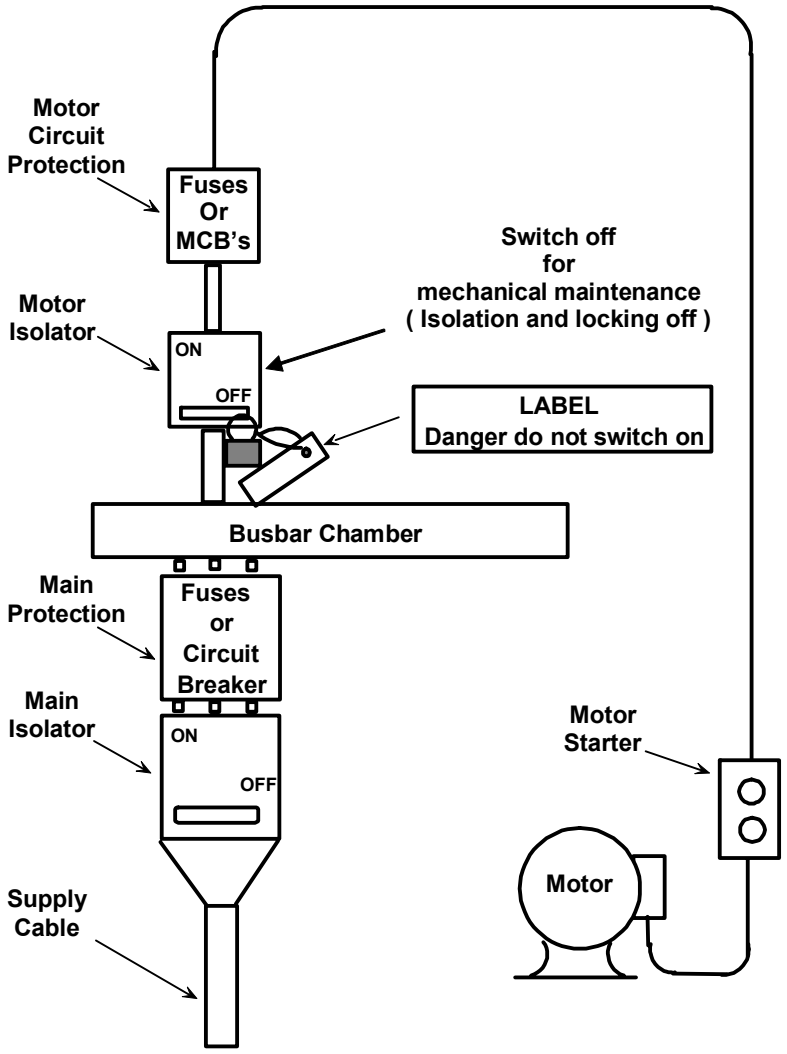

Figure 13

Figure 14 illustrates an example of a motor final circuit equipment layout.

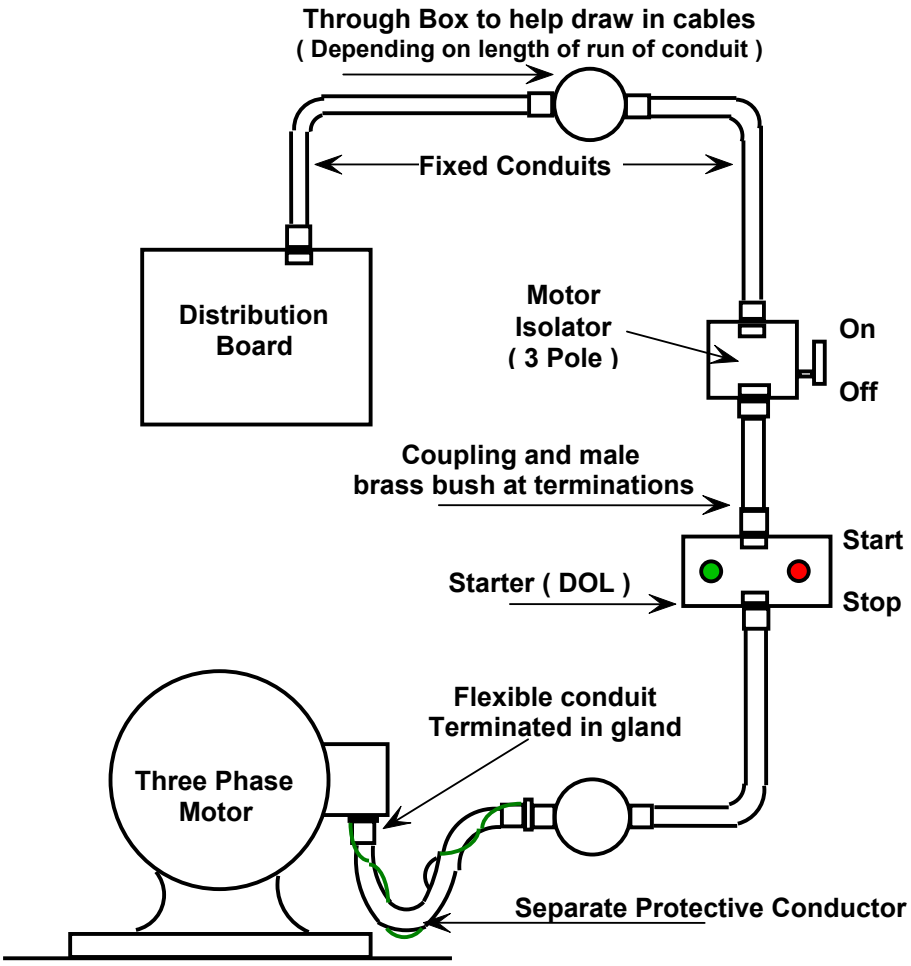

Figure 14

Note: A separate earth protective conductor was fitted on the outside of the older types of flexible conduit. Therefore mechanical protection was not provided.
In modern installations it must be installed inside the flexible conduit with the power cables.

Flexible Conduit

Flexible conduit is made of interlinked metal spirals often covered with a PVC sleeving. The tubing must **not** be relied upon to provide a continuous earth path and, consequently, a separate protective conductor must be run inside the flexible tube.

Flexible conduit is used for the final connection to motors so that the vibrations of the motor / machine are not transmitted throughout the electrical installation. It also allows adjustments to be made to the final motor position for drive belt tension etc.

Assembly Instruction

Figure 15 shows one type of flexible conduit and gland.

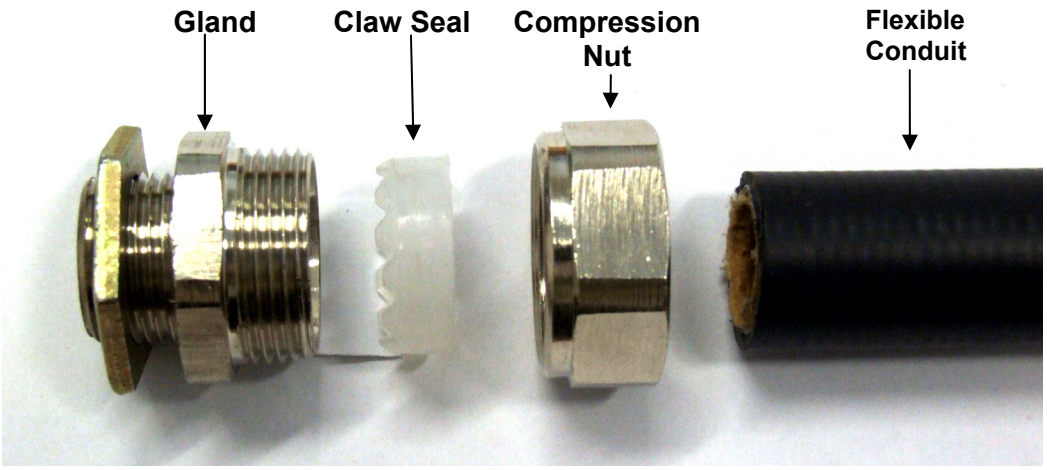

Figure 15

1. Cut the conduit square with a knife edge blade rather than a hacksaw.

2. Dismantle the gland body.

3. Fix the gland body in the enclosure entry.

4. Assemble the compression nut and claw seal loosely on the conduit end (*correct way round*).

5. Push the conduit down into the gland body.

6. Assemble the compression nut onto the body thread **while continuing to apply a force on the conduit**.

7. Tighten the compression nut **until finger tight**.

8. Using a **spanner** tighten the compression nut **two further turns** to provide a dust and water tight seal between the conduit and gland.

Definitions

Contactor (mechanical): A mechanical device having only one position of rest, operated electromechanically and capable of making, carrying and breaking currents under normal circuit conditions, including overload operations.

Note: A contactor is usually intended to operate frequently.

Emergency: An unexpected occurrence or condition that could cause danger and requires immediate action.

Emergency Switching: An operation intended to remove as quickly as possible, danger that may have occurred unexpectedly. This includes emergency stopping.

Undervoltage: Any voltage less than the nominal voltage of the installation.

Unit Related ETCI Rules

Protection against Under-voltage	**445** 451.1, 451.5
Isolation	**462** 462.5
Switching for Mechanical Maintenance	**463**
Emergency Switching including Emergency Stopping	**464** 464.2
Identification and Marking	**514** 514.1
Voltage drop in Consumers Installation	**525** 525.2 (note, only in relation to motors)
Devices for Protection against Overcurrent	**533** 533.3, 533.3.4
Devices for Protection against Under-voltage	**535** (note1, item 2 only)
Devices for Isolation and Switching	**537** 537.3 All 537.4 All
Motors and Control Equipment	**552** 552.1, 552.1.1, 552.1.2, 552.1.3 552.2, 555.2.1
Motor Rotation	**613** 613.9

Terminal Blocks

Figure 16 shows a simple terminal block arrangement. Individual terminals are designed to clip onto a variety of mounting rails. They are manufactured in a variety of sizes to accommodate any cable CSA. Green / Yellow earth terminals are designed to make good contact with the mounting rail on tightening of the centre screw. Other colours are available but are not essential.

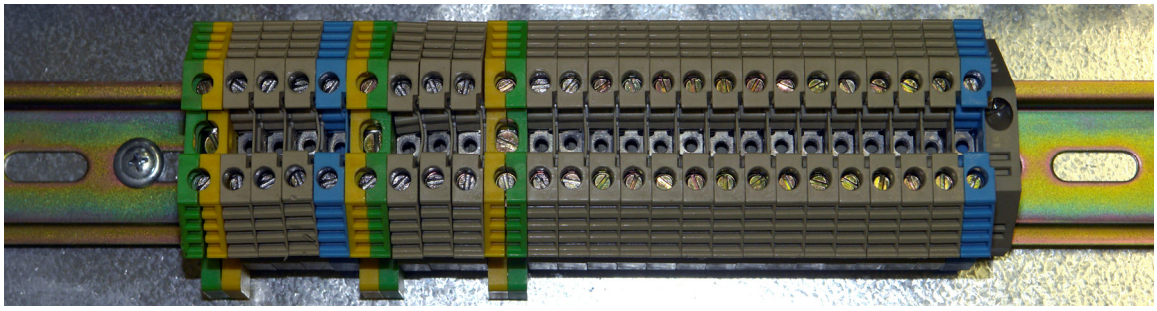

Figure 16

The terminals must be installed the correct way round as each one is generally insulated on one side only. An end insulator must be installed to insulate the last terminal. An end clamp must be used to prevent the terminals from spreading apart. An earth terminal doubles as an end clamp. Terminals with solid links or fuse holders are also available.

Pushbuttons, Switches and Indicators

Pushbutton, switch and indicator units are manufactured in various styles. While they may differ in appearance, they operate basically the same way. They are available in different IP ratings to suit the environment in which they are to be installed. Pushbuttons with 'built in' indicator lamps are also available.
All these devices are generally known as **control and signalling units**. The more commonly used units are 22 mm in diameter. They are manufactured in metal for mounting on metallic doors of control panels. These doors must be earthed. Plastic versions are also available and are generally used to provide double insulated control stations etc.

Pushbuttons are colour coded as follows:

Start Button	Green
Stop Button	Red
Inch Button	Black (Optional exercise for faster apprentices).

Indicator Units **may** be colour coded as follows:

Run Indicator	Green
Fault Indicator	Red
Power "ON"	White

Start Button

A start button consists of a **green** coloured actuator, which when pressed operates a normally **open** contact. On pressing the green actuator the normally open contact will close. These are fitted on the panel door via a mounting collar. The actuator is fitted through a suitable hole in the panel door. A rubber washer is used on the outside to provide ingress protection. The actuator is locked into the collar. The collar is secured to the panel door by a screw. This action compresses the rubber seal on the actuator. Finally the contact block is simply clipped on to the collar. See Figure 17.

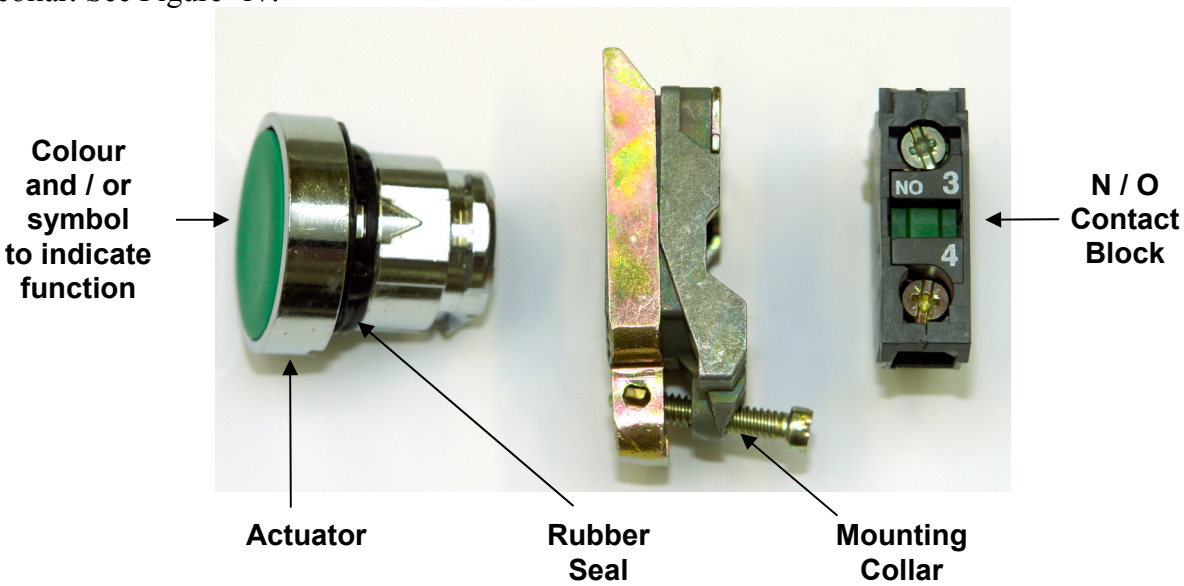

Figure 17

Stop Button

A stop button consists of a **red** coloured actuator, which when pressed operates a normally **closed** contact. On pressing the red actuator the normally closed contact will open.
See Figure 18

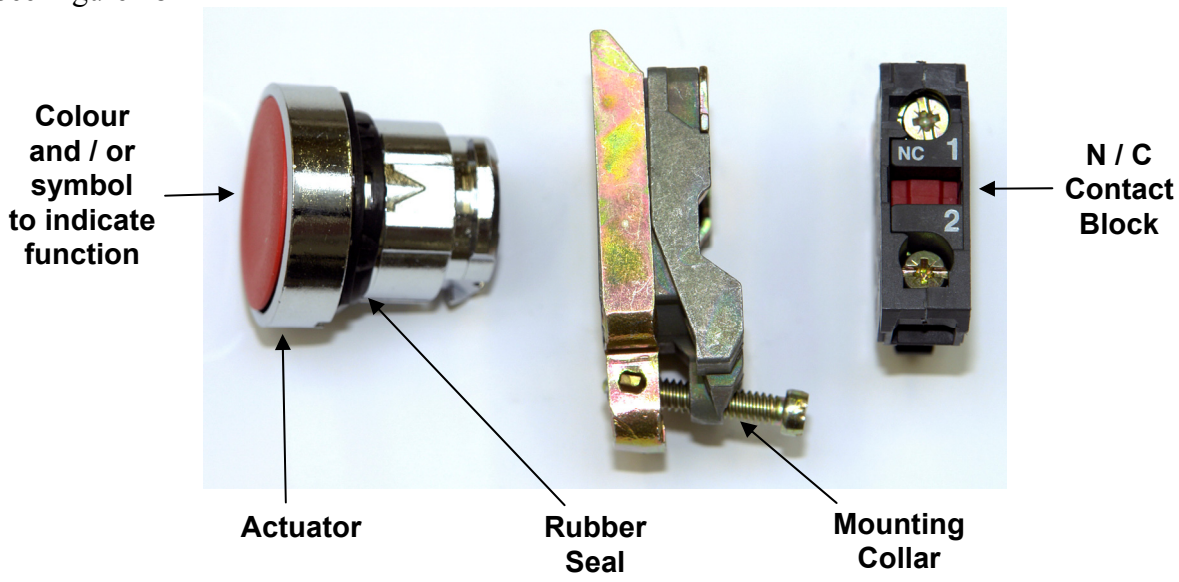

Figure 18

Emergency Stop Button

This is an emergency stop button and it differs from a standard stop button as follows:

- It has a large, easy to operate, mushroom shaped actuator.
- This actuator must be mounted on a yellow background.
- When operated, the actuator latches in the “Off “ position.
- The actuator is released by twisting the mushroom shaped head.

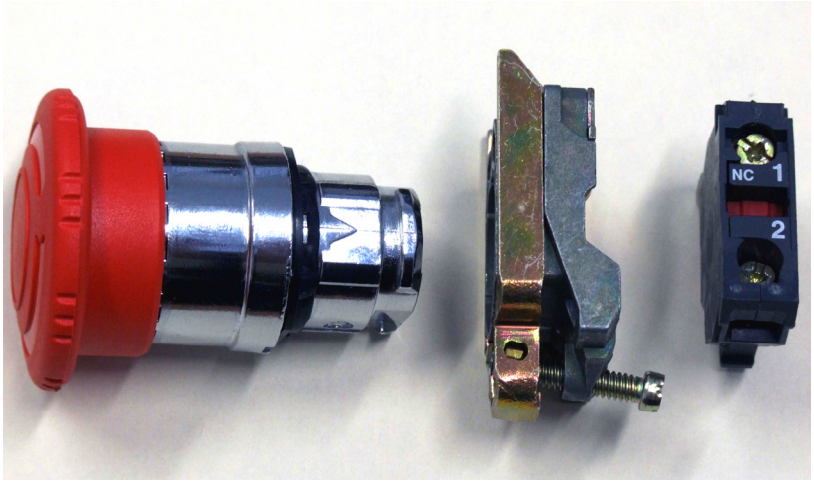

Figure 19

Auto / Off / Hand Selector

This is a three position switch, having an “Off “position in the centre. When turned to the left, a normally open contact is closed. This operation selects an automatic function. When turned to the right, a different normally open contact is closed. This operation selects a manual or hand operated function.

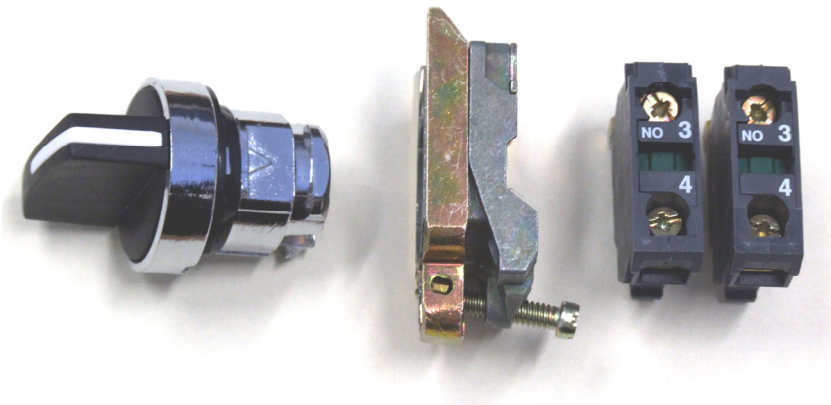

Figure 20

Signal Lamp Units

A signal lamp unit consists of an appropriately coloured lens, lamp holder and mounting arrangement similar to a push button unit. A 230 V "small centre contact" (SCC) lamp is used in the holder shown in Figure 21. An incandescent lamp or a neon lamp may be used. The phase conductor **must** be connected to the terminal marked **X1**.

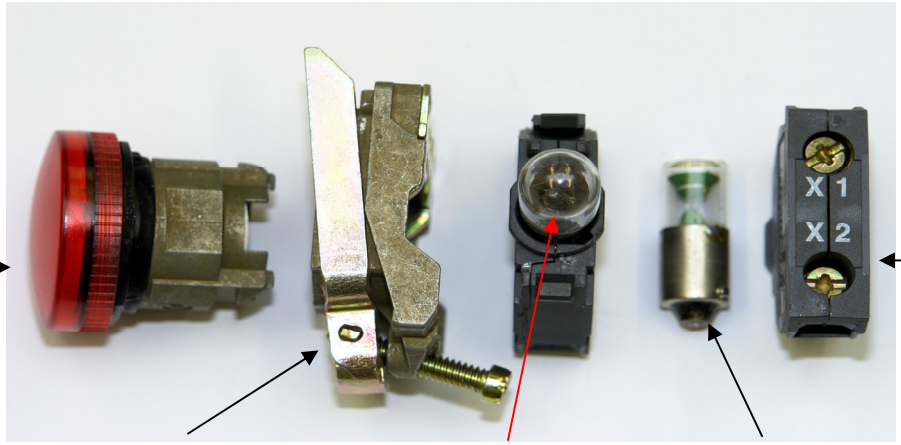

Figure 21

Other types of signal lamp units are available however they are not covered in Phase 2.

Figure 22 shows a small control panel which consists of a number of the control and signalling devices previously described.

Figure 22

Relays

Operation of a Relay

A relay is an electro-magnetically operated switch. It consists of an operating coil wound around an electromagnet pole piece, a moving armature and one or more sets of contacts. When a voltage of the correct value is applied across the coil terminals, the resulting current flow through the coil produces a magnetic field similar to a bar magnet. The armature is attracted by the magnetic field and so moves a small distance.
This movement operates the contact(s). The pole piece is magnetically soft. When current flow through the coil ceases, the pole piece loses its magnetism and the armature returns to its de-energised position. This allows the contact(s) return to the de-energised or normal state.
See Figure 23.

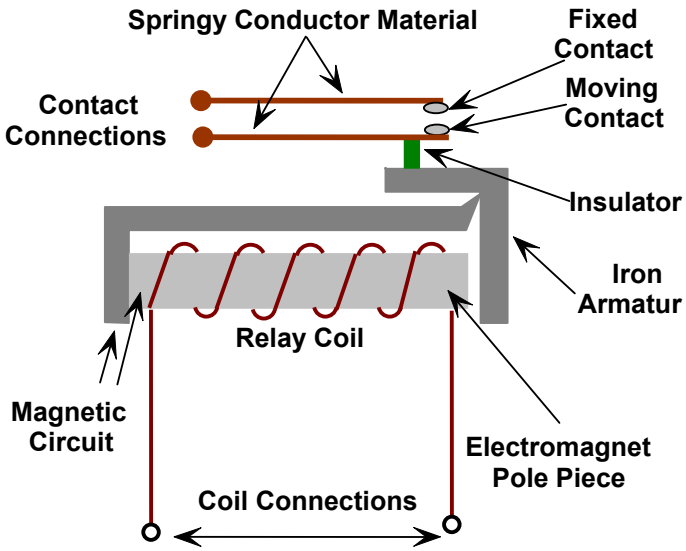

Figure 23

A relay is a device in which a **low value** of current and / or voltage operates an electromagnetic coil. This coil in turn operates a contact or contacts, which control or switch a high or relatively high value of current and / or voltage.

Normally Open Contact (NO)

This is the normal state of the contact when the electromagnet (coil) is de-energised. This contact will close instantaneously when the electromagnet is energised. On de-energising the coil, this contact will return to its normal state i.e. open.

Normally Closed Contact (NC)

This is the normal state of the contact when the electromagnet is de-energised. The contact will open instantaneously when the electromagnet is energised. On de-energising the electromagnet, the contact will return to its normal state i.e. closed.

There are a large number of different designs on the market. In general relays are used to receive an electrical signal from some source (pushbutton, timeswitch, thermostat, pressure switch) and relay it on to another device. They are usually capable of switching currents in the region of 10 Amps, although relays up to 30 Amps are available. They are **not normally** used to switch inductive loads such as electric motors. Some relays **are designed** for this purpose.
In Phase 2 we examine the type more commonly used in motor control panels. Figure 24 shows two 4 pole (4 sets of contacts) relays. They look identical, but on closer examination they are not. The manufacturer has identified them with type numbers, CA2-DN 40 and CA2-DN 31. The 40 section of the number on the first relay signifies that it has 4 normally open contacts and 0 normally closed contacts. The 31 section of the number on the second relay signifies that it has 3 normally open contacts and 1 normally closed contact.

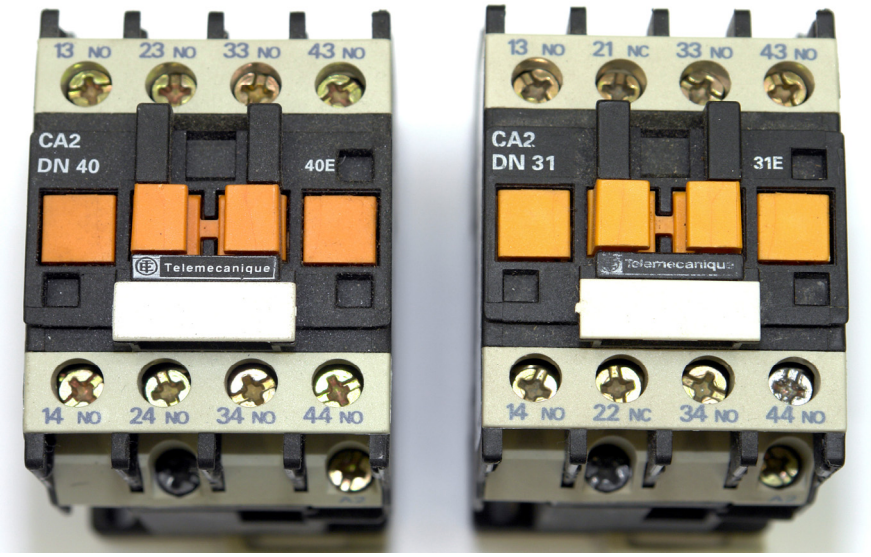

Figure 24

Each contact is identified by a two digit number. The first digit signifies the position of the contact on the relay 1 to 4 in this case. The second digit signifies the type of contact. A contact marked 1-2 is a normally closed contact. A contact marked 3-4 is a normally open contact. The coil terminals are marked A1 and A2. Relay coils are usually identified by the letter K, followed by a digit up to the total number involved in the circuitry, e.g. K1 to K5.
Note: It is conventional to draw contacts in their de-energised positions.

CA2-DN 22 Relay

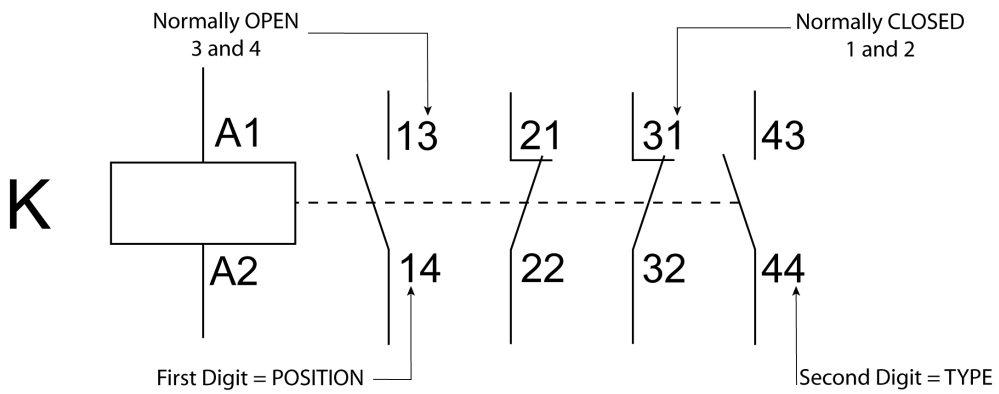

Figure 25

Contactors

Contactors are very similar to relays. They are specifically designed for switching load currents. They are used to supply electric motors, heaters, lamps etc. Contactors are designed for high switching frequency, long life and short switching times. The making / breaking capacity of the main contacts is matched to the possible motor starting current. High value overload currents or short circuit currents can damage the main contacts, therefore protection must be provided by fuses or MCB's.

Generally contactors have three main contacts plus one auxiliary contact. The current rating of the main contacts will depend on the load to be switched and may be as low as 10 Amps or as high as 2000 Amps. The current rating of the auxiliary contact(s) is generally around 10 Amps.

Figure 26 shows a 65 Amp contactor. The 3 Phase supply is connected to the three main terminals on the top of the contactor. The load is connected from the three main terminals on the bottom. On the right hand side of figure 26, the cover has been removed to show the three main contacts and one of the auxiliary contacts.

> Note the difference in the physical size of the main (65 Amp) contacts and the auxiliary (10 Amp) contact.

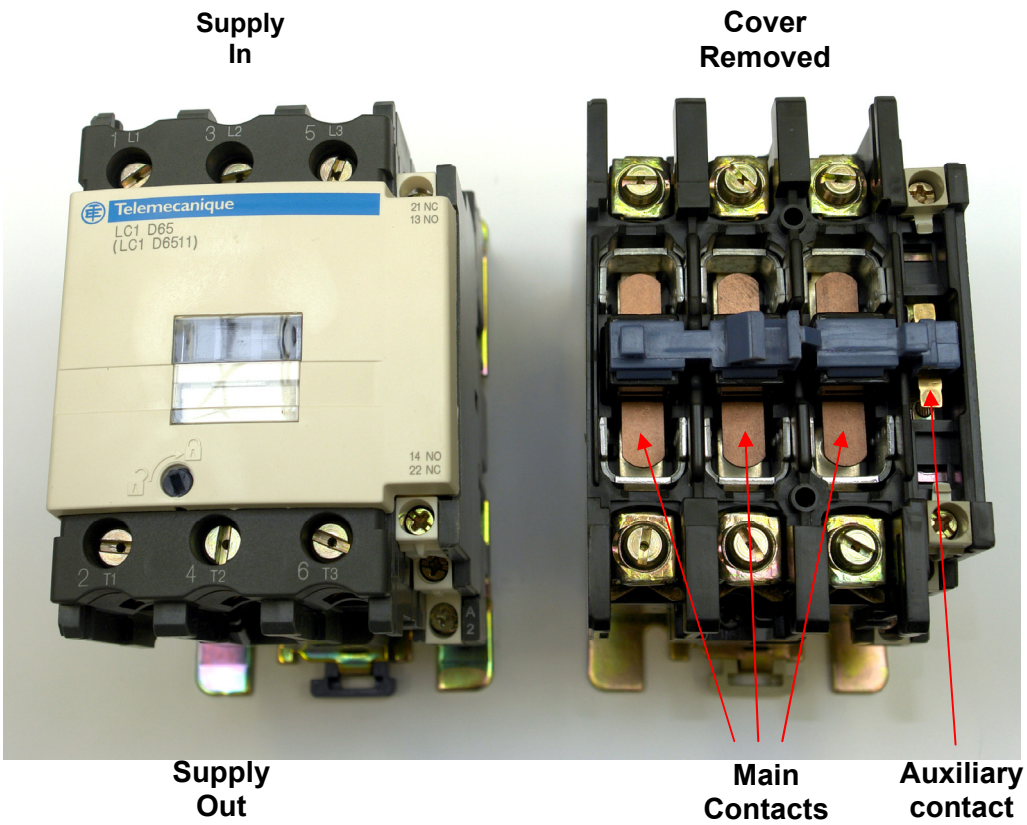

Figure 26

Figure 27 shows a 9 Amp contactor which is suitable for any motor up to 4 kW. On this size of contactor the auxiliary contact appears to be the same as the main contacts. The difference is only visible on dismantling the contactor and examining the contacts. The auxiliary contact is **not** designed to switch power to or from a load such as a motor. If used for such a purpose it would quickly fail. The coil terminals are located towards the base of the contactor. A1 is top left and A2 is available both top right and bottom right.

Figure 27

Figure 28 shows the contact arrangement inside the contactor. The difference between the three main contacts and the auxiliary contact is visible.

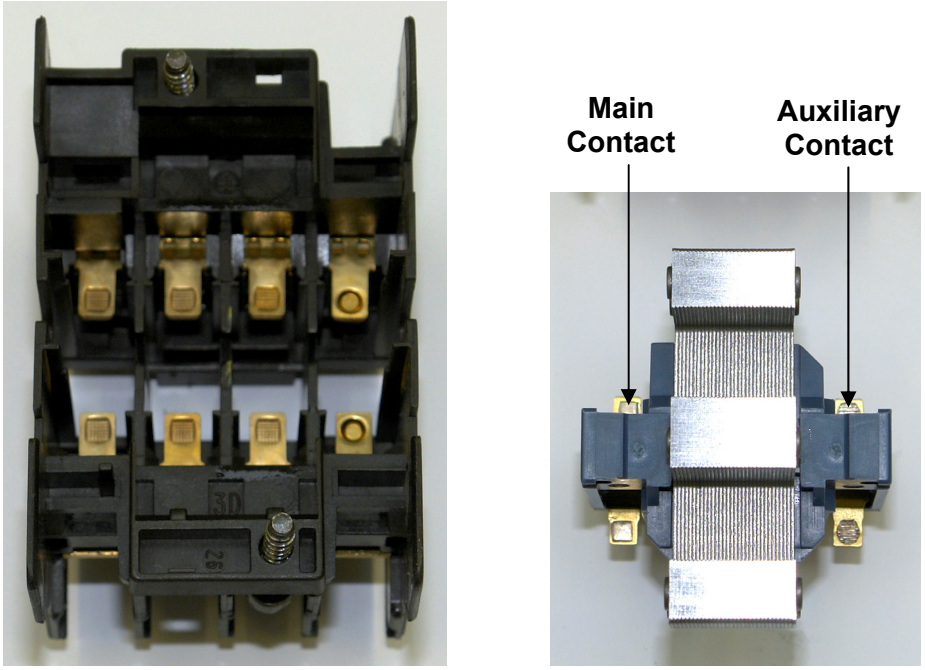

Figure 28

Each main contact is identified by a single digit number. The coil terminals are marked A1 and A2. The coil, of a contactor used to switch supply to a motor is usually identified by the letters KM, followed by a digit up to the total number involved in the system, e.g. KM1 to KM5.

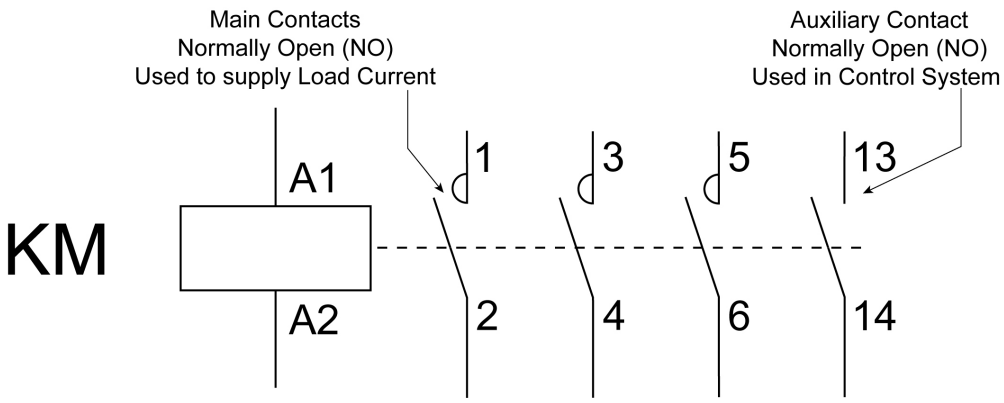

Figure 29

Figure 30 shows a more modern 9 Amp contactor. The most noticeable differences are;

- The inclusion of a normally closed auxiliary contact
- The position of the auxiliary contacts
- The position of the coil terminals

Figure 30

Figure 31 shows the main parts of a contactor. It consists of an insulated base which houses a laminated magnetic core. This core is mounted on rubber for quiet operation. The operating coil is fitted between the magnetic core and the armature which carries the moving contacts. When the correct supply is applied across the terminals of the coil, magnetism is produced and the armature is pulled towards the magnetic core. This movement occurs very fast and operates the contactor contacts. Each contact is spring-loaded to ensure positive closure and minimum contact bounce. When supply is disconnected from the coil, the armature is quickly returned to its original position by the main spring.

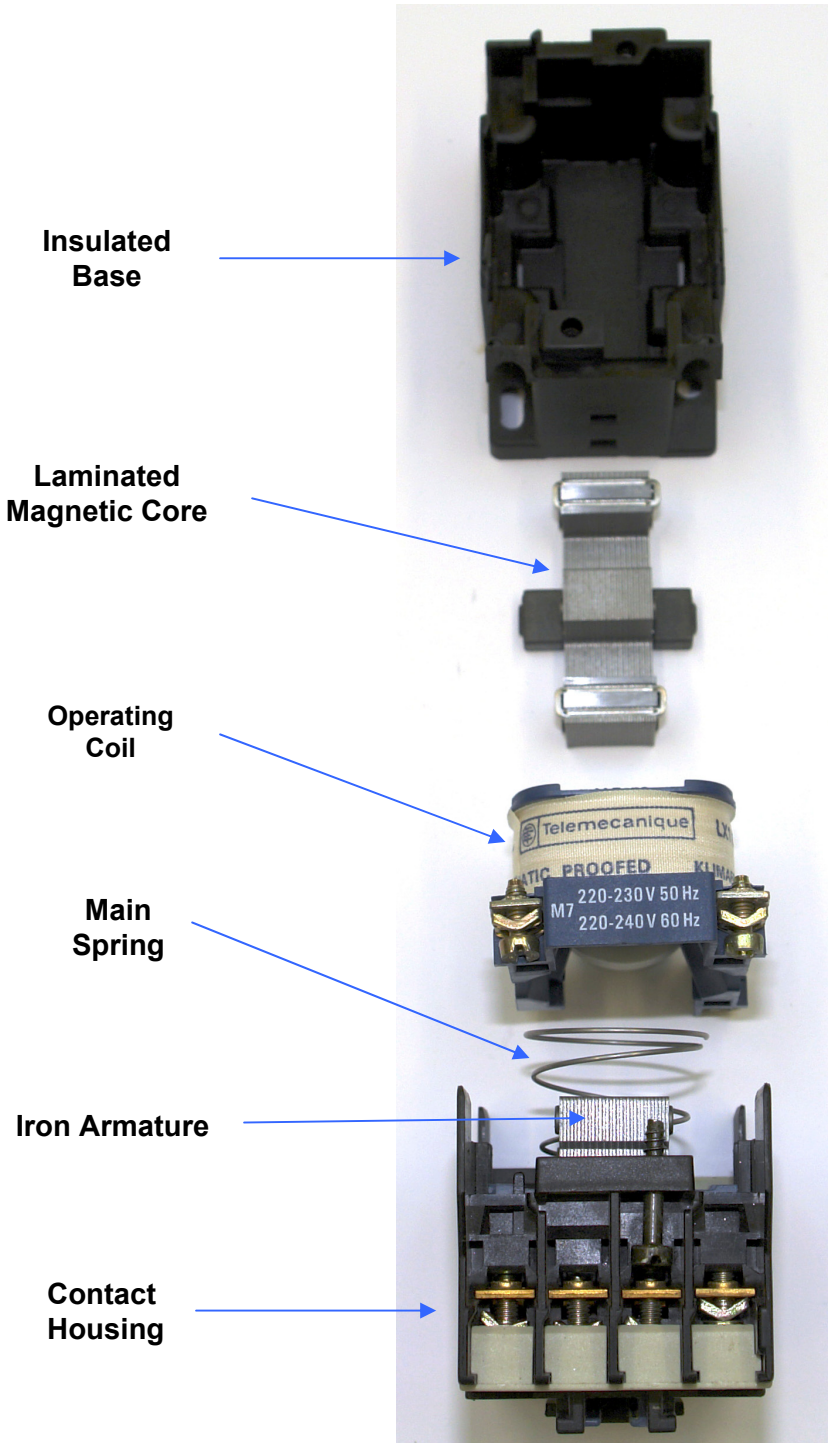

Figure 31

Contactor Coils

The coils of most modern contactors can be quickly changed without the use of any special tools. These contactor coils may be AC or DC operated.
AC standard coil voltages are 24, 110, 230, 400 Volts 50 Hz.
DC standard coil voltages are 12, 24, 48, 230 Volts DC.
Other non-standard voltage ratings are available on request.

It is most important that the coil voltage, **type** and **value** are matched to the supply available. A 230 Volt supply will not energise a 400 Volt coil. A 400 Volt supply will operate a 230 Volt coil, however the coil will quickly overheat and burn-out.

Auxiliary Contact Blocks

Frequently it is necessary to have more auxiliary contacts operated by a single contactor. Additional contacts may be made available by the use of **auxiliary contact blocks**. These contact blocks are available with one, two or four contacts. From these it is possible to obtain any number of normally open and / or normally closed contacts from one to four.
Figure 32 shows an auxiliary contact block having four contacts. It has two N/O and two N/C contacts (LADN**22**).

Figure 32

These auxiliary contact blocks are designed to be clipped piggyback style to a contactor. When the contactor is energised, it also operates the auxiliary contact block. See Figure 33.

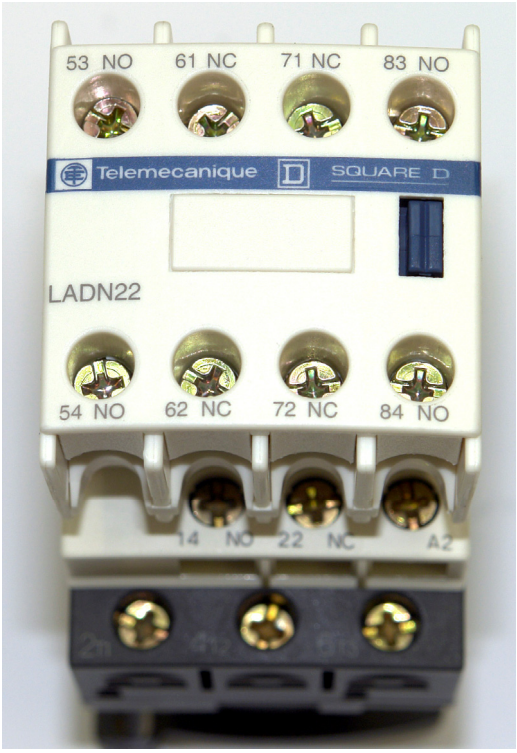

Figure 33

Overload Protection

High temperatures have an adverse effect on insulating materials. It is essential therefore, that electric motors should be provided with protection against overheating. Excess current taken by a motor causes overheating. The protective devices most commonly used, detect this excess current. However excess currents do exist during starting, but as these are not for long periods of time they do not cause overheating. Fuses or MCB's, cannot be used since the starting current of the motor would cause them to blow / trip. It is therefore desirable for over-current protective devices to have a built in "time lag" to facilitate such starting currents. The over-current protective device referred to above is called an **overload relay**. Fuses or MCB's are used in conjunction with overload relays to provide protection against short circuits, earth faults or faults in the main wiring.

Overload Relay

There are two types of overload device in use;

- The thermal overload relay
- The magnetic overload relay

The thermal overload relay is the more popular type and is the only one covered in Phase 2.

Thermal Overload Relay

Figure 34 shows a popular type of thermal overload relay. It is suitable for the protection of a motor with a Full Load Current of any value from 1.6 Amps to 2.5 Amps. This value can be set using the current range adjustment. It also features a stop button, a hand / auto – reset button and a test button. It has one N/O and one N/C auxiliary contact. When installed and properly adjusted it may be sealed to prevent / monitor any unauthorised interference with the settings.

Figure 34

The three pins protruding from the top are connected directly into the outgoing terminals of a contactor. Two of these pins are adjustable so that they can be matched up to a number of different size contactors. See underneath pins for this information.

The overload relay may also be installed using a terminal block for separate mounting. Again the pins are adjusted to suit the terminal block. See Figure 35.

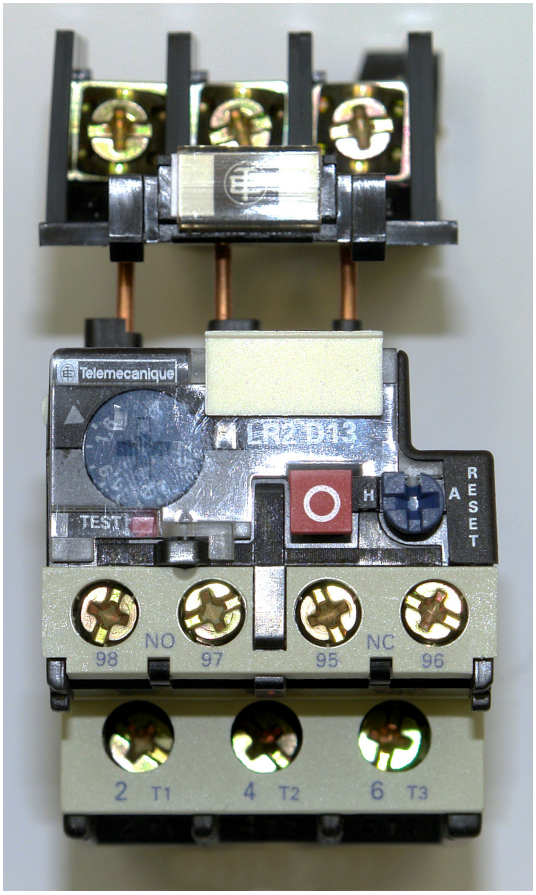

Figure 35

OVERLOAD UNIT AUXILIARY CONTACTS

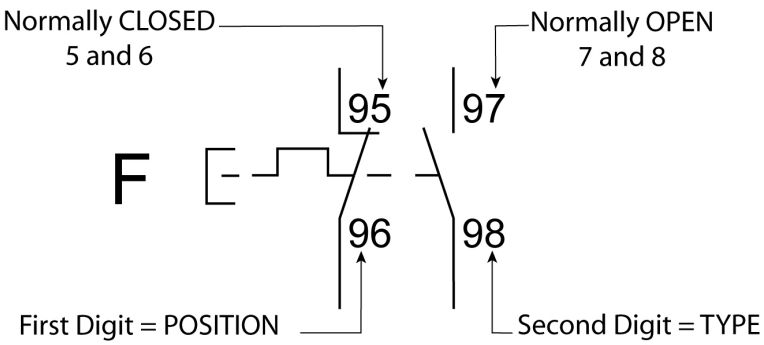

Figure 36

Operation of Thermal Overload Relay

A thermal overload relay works on the principle that, current flowing through a conductor produces heat. If the current is doubled in value the amount of heat produced will be quadrupled. The current taken by a three phase motor is passed through a set of three small heater elements. One heater is wrapped around each of the three bi-metal strips as shown in Figure 37.

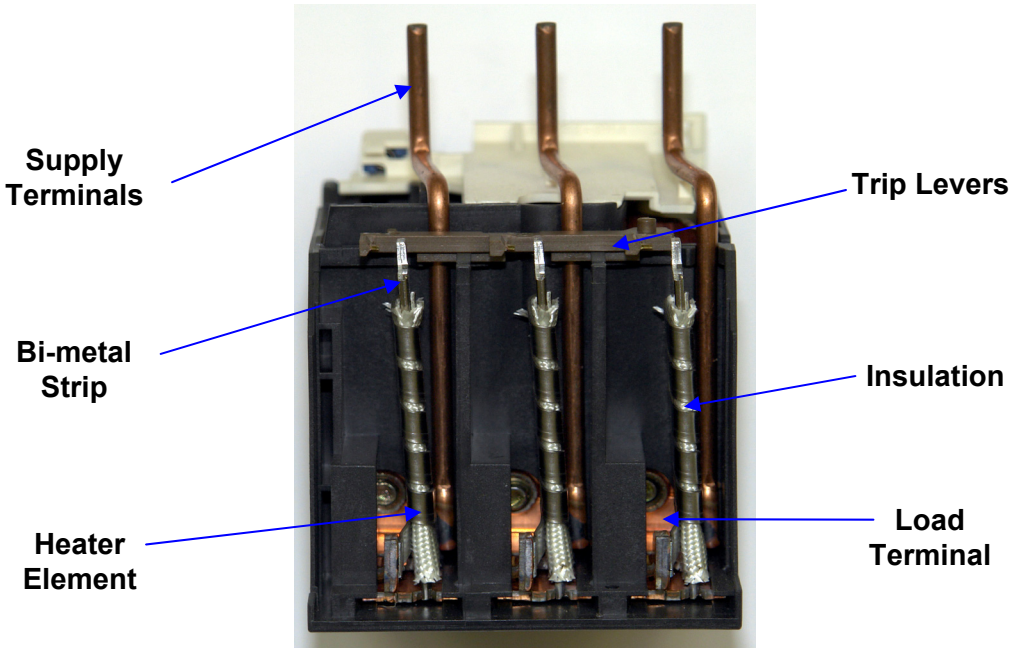

Figure 37

The operation of the thermal overload relay is as follows:

Under normal conditions the heat produced by the heater elements is just balanced by the heat lost from them to the surroundings and consequently there is no effect on the bi-metal strips. When an overload current flows, **more heat** will be produced by the heater elements, resulting in further heating of the bi-metal strips, thus causing them to bend more. This bending of the bi-metal strips changes the position of the trip lever, which causes the auxiliary contacts to change over.
The N/C contact opens and is used to disconnect supply from the contactor coil, thereby disconnecting the supply from the motor. The N/O contact closes and is generally used to supply a signal lamp to indicate that the overload relay has tripped.

Thermal Overload Relay Elements

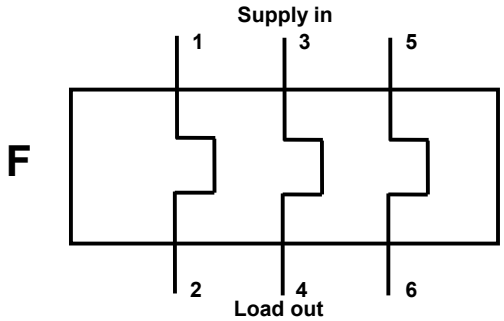

Figure 38

Reasons for Overload Protection

As stated earlier, excess current flowing through a motor winding will cause overheating. This in turn will result in damage to the winding insulation. If this occurs the motor is described as being **"burned out"** and must be rewound or replaced.
Here are some of the reasons why motors burn out:

No overload protection
Incorrect overload relay fitted
Incorrect overload relay setting

The main functions of thermal type overload relays are to prevent burn out of windings due to overloading or single phasing. Overloading applies to all motors, while single phasing only applies to three phase motors. See below.

Overloading

When the load is increased on an induction motor the rotor speed reduces and the current taken by the motor increases. When this current rises above the motor Full Load Current, the motor is considered to be overloaded. Generally speaking, motors can cater for a 110 - 120% overload. Consequently overload devices are calibrated to allow for this. An overload relay set at 10 Amps will trip after a time delay, on a load current of 10 + 15% = 11.5 Amps.

A thermal overload relay will allow for the starting current of an induction motor. It takes time to heat the bi-metal strips. This provides a **time lag** to allow the starting current flow for a sufficient period of time to get the motor up to full speed.
Low value overloads will be detected and acted upon after a period of time.
Higher value overloads will be detected and acted upon in a shorter time.

Single Phasing

If a break occurs in any one phase of the supply to a three-phase induction motor, the motor will continue to run on two phases depending on the load. If fully loaded it will probably stall and must be quickly disconnected from the supply as the load current will rise sharply. If it is not fully loaded it will continue to operate the load. In order to do so it will slow down and draw more current from the remaining two phases. This condition is called "**single phasing"**.
A bad connection, a blown fuse or a faulty contactor main contact will produce this effect.
A motor will generally not start on two phases; if it does start it will do so very slowly.

This is undesirable and will cause damage to the motor winding(s). **Most** thermal overload relays are equipped with a **differential device**. This simply means that they can differentiate between all three bi-metals being heated and only two being heated. If only two bi-metals are heated the relay will operate at a lower load current. In this way it provides protection against damage due to single phasing.

Note This is the reason why all three heater elements must be used on a single phase motor circuit.

Motor Starter

Direct On Line Starter

The term motor starter is used to describe a device which is used to:

- Safely apply power to an electric motor to cause it to start up and run
- Protect a motor from the effects of overloading or single phasing
- Safely disconnect a motor from the supply to stop it
- Prevent the motor re-starting after a supply failure (only where danger may exist)
- *This is referred to as* ***No Volt Protection****.*

The simplest form of motor starter for the induction motor is the Direct On Line starter. The DOL starter comprises a contactor and an overload protection relay. The contactor switches the supply to the motor. It is controlled by a start button and a stop button. The stop button is an integral part of the overload relay. An auxiliary contact on the contactor is used to maintain the supply to the contactor coil after the start button is released. If the supply to the contactor coil fails, the contactor is de-energised and the motor stops. The start button must be pressed to energise the contactor again. The overload relay monitors the current being taken by the motor. Figure 39 shows an enclosed starter.

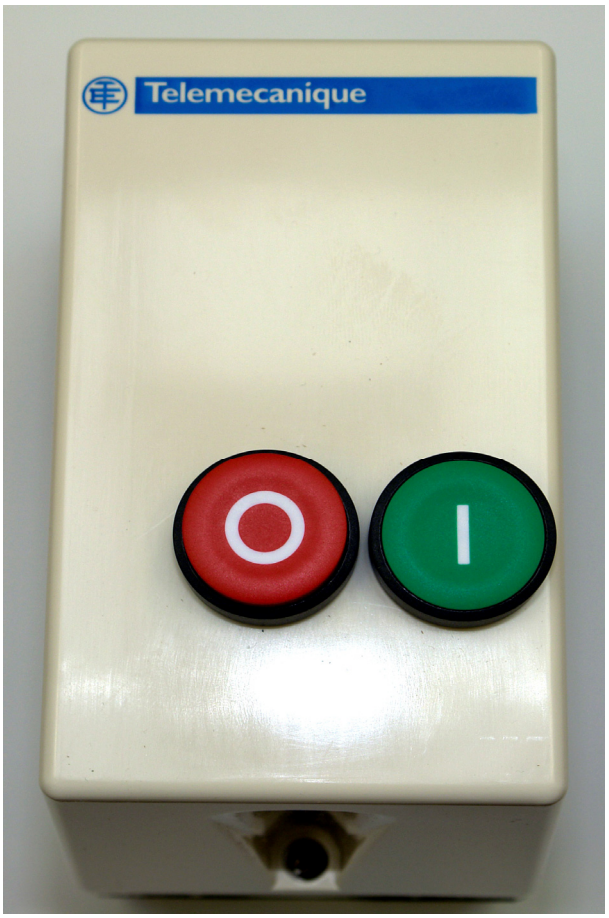

Figure 39

Direct On Line Starter

A DOL starter connects the three main lines (L1, L2 and L3) directly to the motor terminals when the start button is pressed. The drawing of a DOL starter is generally done in two separate stages. These are called the **Power Circuit** and the **Control Circuit**.

Power Circuit

The power circuit shows all the components or parts of components required to handle the load current of the motor. Remember that the motor in question may be a small 1.5 kW (2 HP) or a large 225 kW (300 HP). As the motor power rating increases so too must the current rating of the contactor, overload relay and supply cables.
N.B. When wiring circuits, the supply should be fed in on the low number terminal and out on the high number terminal. See figure 40.

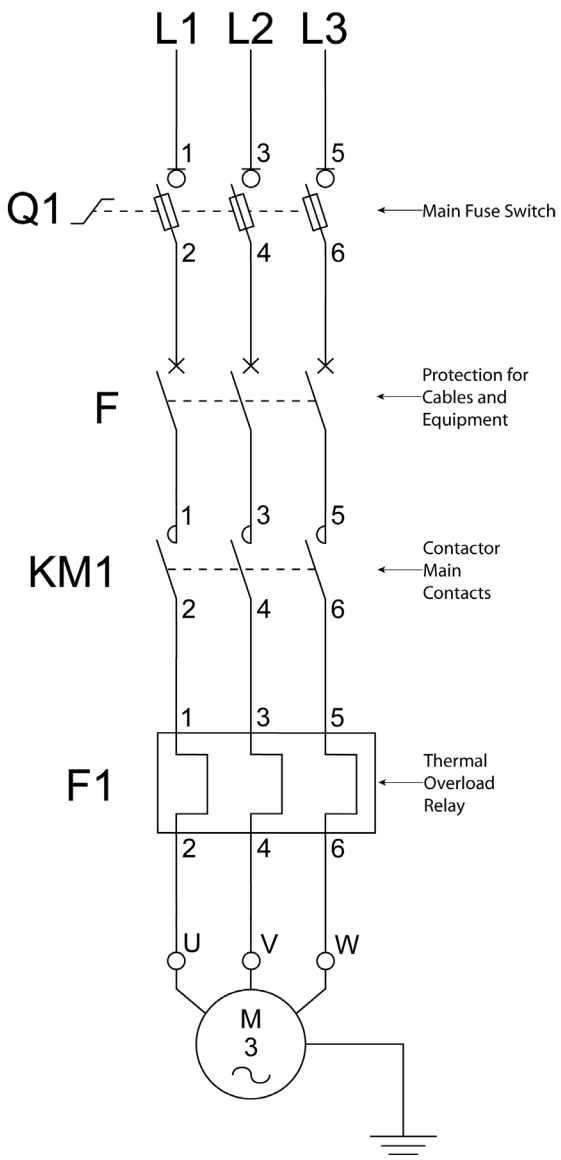

Figure 40

Control Circuit

The control circuit shows all the components or parts of components required to control the motor. These components are basically the same regardless of the power rating of the motor in question.

Note When wiring circuits, the supply should be fed in on the low number terminal and out on the high number terminal. See figure 41.

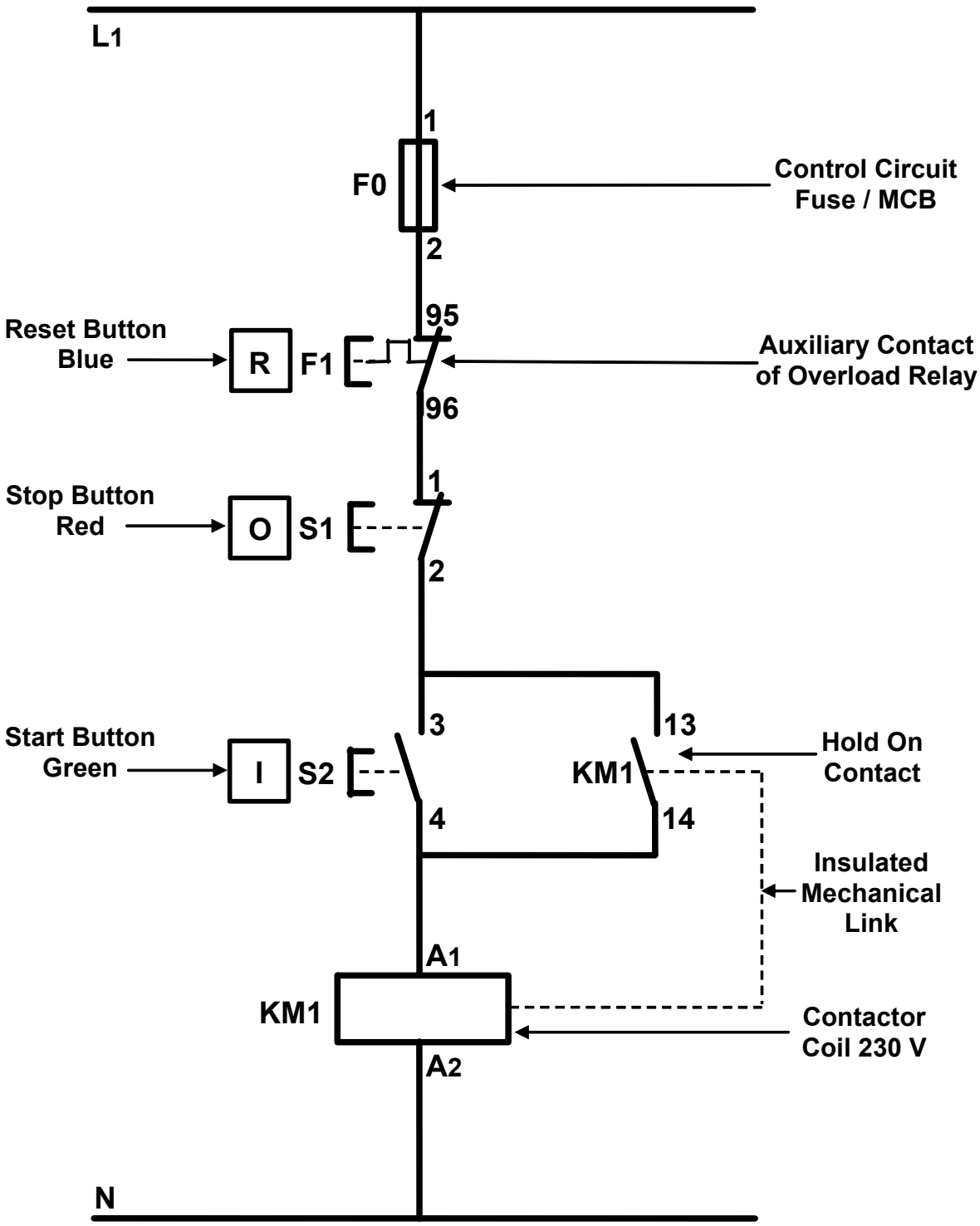

Figure 41

Identification of Equipment

- **F** Protective device
- **H** Signalling device
- **K** Relay, contactor
- **M** Motor
- **Q** Mechanical switching device for power circuit
- **S** Switch, pushbutton
- **X** Terminal, plug and socket

Circuit Description

Refer to the circuit illustrated in Figure 41.

The motor being controlled by KM1 will **START** if:

- Supply voltage is present between L1 and N
- The control fuse F0 is good
- The normally closed (NC) contact 95 – 96 is closed
- The stop pushbutton S1 is not operated
- The start pushbutton S2 is operated
- The coil is energised by the presence of a voltage and the circuit is complete through the coil to the neutral
- The auxiliary contact 13 – 14 (NO) is closed by the operation of the coil
- When the start pushbutton S2 is released current continues to flow through the auxiliary contact 13 – 14 (hold on contact), the coil remains energised and the motor continues to run.

The motor being controlled by KM1 will **STOP** if:

- The control circuit fuse blows or MCB trips or is switched off.
- The overload trips or F1 is pressed causing 95 – 96 (NC) contact to open
- The stop button S1 is pressed
- The voltage reduces to a level which cannot keep the coil energised
- The supply fails

Types of Control

The control system for a single motor may be very simple or it may be reasonably complicated. A process line may consist of a number of motor driven machines. They all have to start and stop as the process demands. There are basically two types of control.

Hand Control

The motor used to drive a basic type pedestal drilling machine is a good example. It is usually controlled as in Figure 41. This is ideal as it provides No Volt Protection. This means that if the supply fails for any period of time, the motor will **not** restart when supply is restored again. Imagine the result, if the drilling machine started up while the operator was tightening a drill bit in the machine chuck.

The motor used to drive a ventilation fan may be controlled by a one way switch. This switch energises the contactor and the motor starts. If the supply fails for any period of time and the switch is left in the "On" position, the motor will restart when supply is restored again. In this case No Volt Protection is **not** provided, as there is no danger to health or safety due to the fan starting unexpectedly.

These are referred to as **Hand Control** or **Manual Control.**

Automatic Control

The motor used to drive an air compressor at a petrol filling station is controlled in a slightly different manner. An automatic air pressure switch is attached to the air reservoir. When the pressure in the reservoir reaches the level at which the pressure switch is set, a N/C contact on the pressure switch opens. This disconnects the power from the contactor coil and the motor which drives the compressor, stops. When the pressure falls to a predetermined level the pressure switch contact closes again and applies power to the contactor coil. This starts the motor again. This process continues once the isolator for the air compressor is in the "On" position. As a result there is always an ample supply of compressed air available for any motorist wishing to avail of it.

This is referred to as **Automatic Control**.

Overload Set Up

When setting up an overload relay to protect a motor in a given situation, the following two questions must be considered:

1. Should the overload relay be set to the **Hand Reset** or **Auto Reset** position**?**
2. What **load current** value should the overload relay be set at?

Hand Reset Position

In the case of motors that are manually controlled, the overload relay must be set to **Hand** reset. The motor will stop if the overload relay trips out and will not restart automatically, regardless of the position of any control switch, until the overload relay is reset.

Auto Reset Position

In the case of motors that are automatically controlled, the overload relay may be set to **Hand** or **Auto** reset as the situation requires.

- If the automatic starting up of the driven machine may cause danger, then the overload relay **must** be on **Hand** reset. This means that an operator is alerted that the overload relay has tripped out and has to be **manually reset**. Part of the operator's function is to ensure that the restarting of the machine does not cause any health or safety problem.

- If the automatic starting up of the driven machine will **not** cause danger, then the overload relay **may** be on **Auto** reset. This means that the operation of the machine is interrupted for the least amount of time possible. This is very important in various cases for example: air compressors, refrigeration units, liquid pumps where the liquid may congeal (set) if allowed cool in the pipe work, etc. An operator could still be aware of the fact that the overload relay tripped out. This information could be recorded automatically if necessary.

Load Current Setting

Overload relays are designed to operate between 110% and 120% of the set value. It is essential that they be accurately set to the **F**ull **L**oad **C**urrent of the motor.

- If set too high, they will not provide proper protection for the motor. Damage may be done to the motor windings through overheating if overloading occurs.

- If set too low they will operate before the motor is fully loaded. This will result in low output from the driven machine and the motor will not be operating at full efficiency.

The setting up of overload relays, differ slightly as type and / or manufacturer changes. The overload relay shown in Figure 39 has a sealable transparent cover over all its adjustable items. Lifting this cover provides access to all these items.

One of these is a large blue dial which is adjustable using a screwdriver. This dial is marked in terms of motor **F**ull **L**oad **C**urrent. It is simply rotated so that the required figure in Amps is in line with the white arrow on the body of the relay. The overload relay in Figure 42 is suitable for any motor with a FLC of 1.6 Amps to 2.5 Amps. The next relay in this range is suitable for any motor with a FLC of 2.5 Amps to 4 Amps. In this way all motor FLC values are catered for.

Figure 42

Just below the blue dial there is a small red button. Pressing this button with a small flat screwdriver will simulate the tripping function. The N/C auxiliary contact 95-96, opens and N/O auxiliary contact, 97-98 closes. A small orange coloured flag appears to the right of the blue dial. This is very useful for checking the control circuit wiring during commissioning.
The red button with a white circle in the centre is simply a local stop button. Pressing it opens the N/C auxiliary contact, 95-96. It does **not** close the N/O auxiliary contact, 97-98.
The blue reset button may be set in either the **Hand** or **Auto** position as necessary. This may be done using a suitably sized screwdriver. When set in the **Hand** position the button is allowed to pop out under spring pressure. It must now be pressed to reset after a trip has taken place. When set in the **Auto** position (press in using screwdriver before attempting to turn) the button is held in. This means that the unit will reset itself after a trip has taken place.

The overload relay shown in Figure 43 has a sealable hinged cover over all its adjustable items. Pulling this cover from the right hand side provides access to all these items.

One of these is a small white dial which is adjustable using a screwdriver. This dial is marked in terms of motor **F**ull **L**oad **C**urrent. It is simply rotated so that the pointer is in line with the required figure in Amps, on the body of the relay. This overload relay is suitable for any motor with a FLC of 2.5 Amps to 4 Amps. The next relay in this range is suitable for any motor with a FLC of 4 Amps to 6 Amps. In this way all motor FLC values are catered for.

Figure 43

Above and to the right of the white dial there is a small black **Test** lever. Pressing this lever with a small flat screwdriver, in the direction of the arrow above it, will simulate the tripping function. The N/C auxiliary contact 95-96, opens and N/O auxiliary contact, 97-98 closes. The letter T will appear on the lever. This is very useful for checking the control circuit wiring during commissioning.
The red button is simply a local stop button. Pressing it opens the N/C auxiliary contact, 95-96. It does **not** close the N/O auxiliary contact, 97-98.
To the right of the white dial there is a small white tab with **H** printed on it. This indicates that the relay is supplied set in the **Hand** reset position.
To change to **Auto** reset this white tab must be prised away with a small flat screwdriver. This reveals a small blue lever. When this lever is moved downwards, an A appears indicating that the relay is now set in the **Auto** reset position. The **Test** lever will **not** operate in the **Auto** position.

Problem Solving Techniques

To successfully fault find on even simple motor control circuits, one must understand the system and all the components involved in it. All relevant information such as diagrams, drawings, record sheets should be available and used to assist in solving the problem. Company safety procedures must be adhered to. Phase 2 apprentices are not allowed to fault find on live projects. The approximate resistance of all of the following items must be known or available to compare against actual readings at the time of the fault.

- Open Circuit — Infinity
- Closed Circuit — approx. Zero Ohms
- Contactor Coil — approx. 500 Ohms (depends on rating of contactor)
- Signal Lamp — approx. 2500 Ohms
- Motor Winding — example 10 Ohms (depends on rating of motor)

Control Circuit

The following steps assume that power was present when the faulty operation was discovered.

Step 1 Note all information provided by way of the following:-
signal lamps, relay / contactor / motor noises etc.

Step 2 Check all safety devices such as emergency stop units for correct position to allow the system start up.

Step 3 Ensure that all overload relays are set. (Remember that signal lamps may be faulty or missing).

Step 4 Check the resistance of the start circuit components from the control protective device, through all switches, push buttons, contacts, coils etc. to the supply neutral. This will involve operating switches, start buttons, stop buttons etc. to prove that the contacts are opening or closing as required.

The problem could be caused by any one or more of the following list of faults:-

- Switch contact open circuit
- N/C contact open circuit or not opening when operated
- N/O contact closed or not closing when operated
- High resistance or open circuit termination
- Open circuit relay or contactor coil
- Short circuit caused by burned out relay or contactor coil
- Physical damage to wiring or components
- Circuit wiring incorrect

Step 5 Repair or replace faulty item(s) as necessary. Test for correct and safe operation. Report on fault found.

Power Circuit

The control circuit may be functioning correctly, but the motor is not running. In this case the driven machinery should first be checked to ensure that it is free to rotate. The motor will not start against a mechanically jammed load. Remember that the loss of one phase to a loaded three phase motor will result in failure to start. As with the control circuit, the assumption is made that full power was present when the faulty operation was discovered.

Having proven that the fault is electrical, the following items should be checked out:-

- Motor isolator closed
- Motor protective device(s) closed
- Contactor main contacts closing correctly
- Motor winding resistance correct
- All interconnecting wiring correct

The problem could be caused by any one or more of the following list of faults:-

- Isolator contact open circuit
- Motor protective device open circuit
- Contactor main contact(s) not closing when operated
- High resistance or open circuit termination
- Open circuit motor winding(s)
- Short circuit motor winding(s)
- Delta connected motor actually connected in Star
- Physical damage to wiring or components
- Circuit wiring incorrect

Insulation Resistance Faults

Remember that an insulation resistance fault will also trip an MCB or rupture a fuse. A fault of this nature is most likely to occur on the following items:-

- Cables
- Motor windings,
- Relay or contactor coils
- Signal lamp units

These faults may occur between **current carrying conductors** or between **current carrying conductors** and **earth.** The use of an Insulation Resistance Tester is required to locate problems of this nature.