TRADE OF

Industrial Insulation

PHASE 2

Module 2

Geometry & Pattern Development

UNIT: 3

Parallel Line Development

Produced by

In cooperation with subject matter expert:

Michael Kelly

Table of Contents

Unit Objective

By the end of this unit ***each apprentice*** will be able to:

- Demonstrate the use of parallel line development.
- Determine joint allowances.
- Develop patterns with joint allowances.
- Develop the pattern for a two piece elbow.

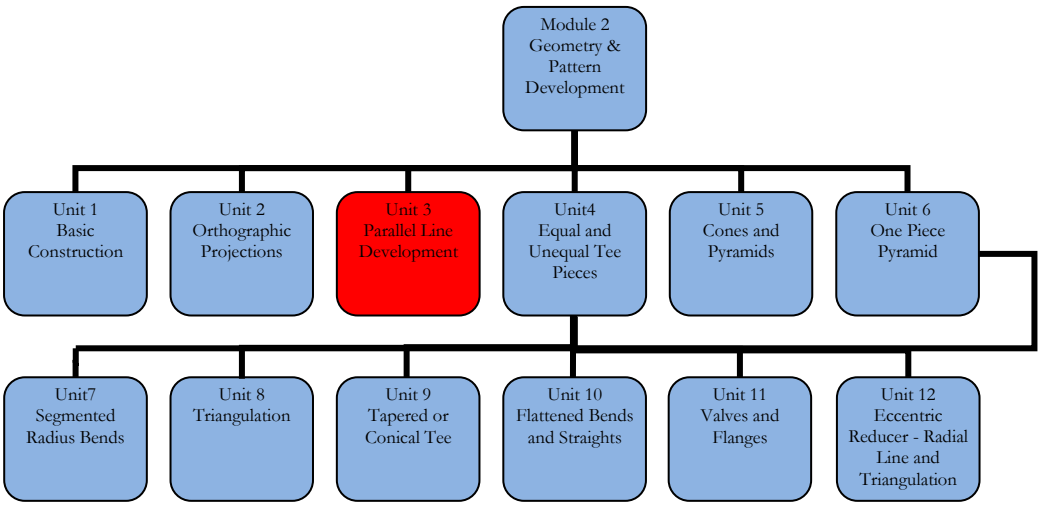

Introduction

Layout or development generally refers to the method of developing the lines which form the pattern. The common methods of layout or development are:-

- Parallel Line Development
- Radial Line Development
- Triangulation

1.0 Pattern Development

Key Learning Points

- Use of parallel line development in the construction of elbows, bends, offsets and tees
- Use of construction lines, lettering and numbering
- Determination of the positions of joint lines in elbows, bends, offsets and tees
- Calculation of circumference

1.1 Parallel Line Development

The parallel line method of pattern development is based on a system of lines drawn parallel to one another on the surface of a sheet metal article and is used to develop items such as elbows, segmental bends, Tee-pieces or valve boxes for example. In general it is used to develop square, rectangular and cylindrical shapes (prisms). An example of parallel development can be seen below.

Truncated Cylinder

The diagram below shows a truncated cylinder developed by parallel line development. On the left is the elevation with all lines shown for developing the cylinder and on the right is the actual pattern or development.

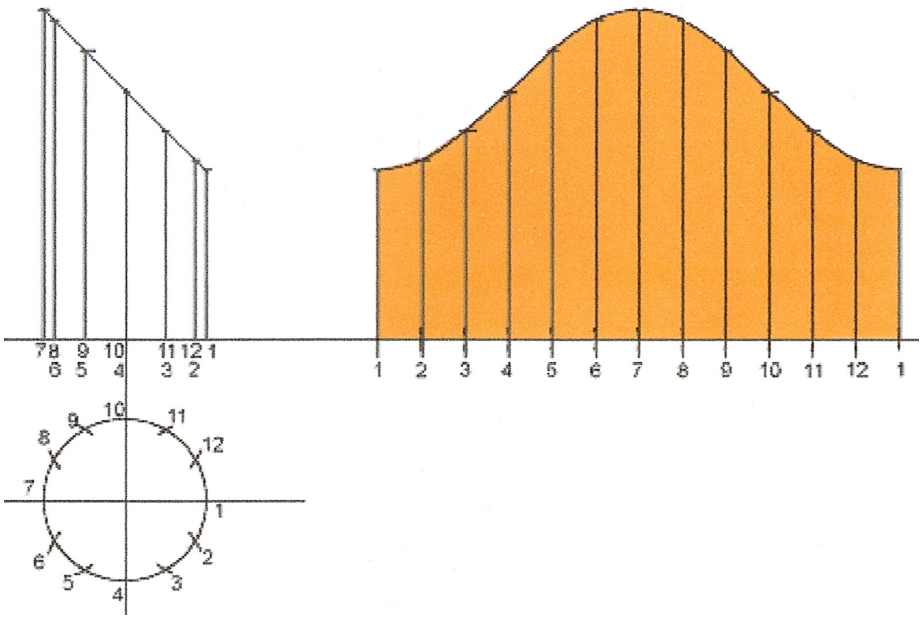

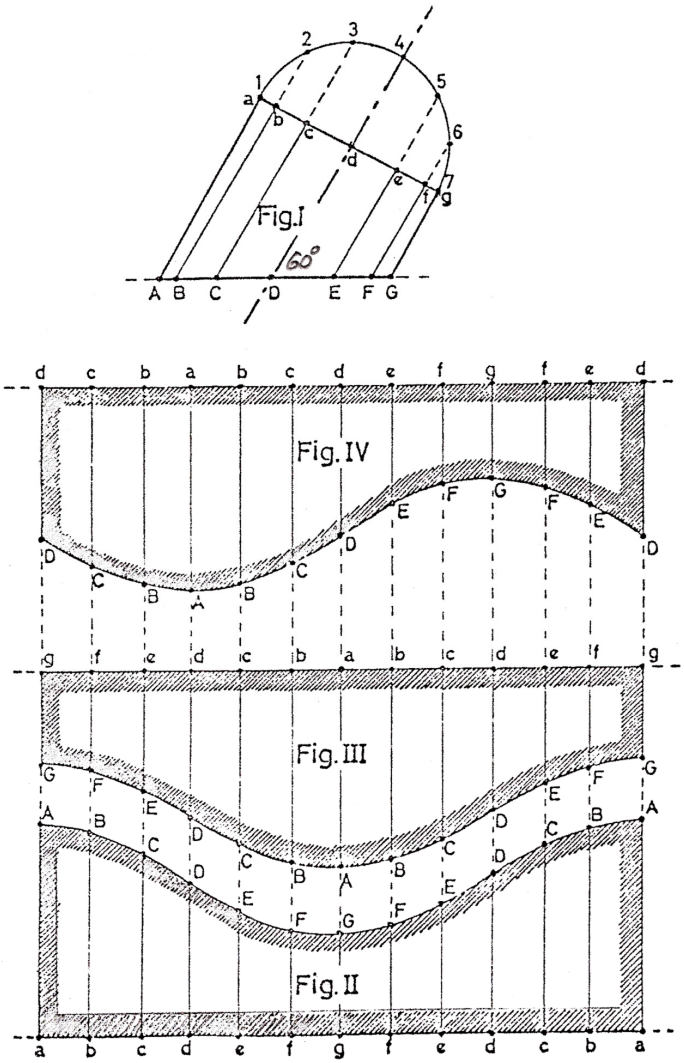

The following diagram shows a pipe socket cut at an angle-Table 1.

Figure I: Shows the elevation.

Figure II: Development, the seam is on the outside, on line A-a.

Figure III: Development, the seam is on the inside, on line G-g.

Figure IV: Development, the seam is on the side, on line D-d.

In figure 1, I first draw the elevation of the pipe socket. This is done by first drawing the horizontal line AG. Next draw the line D-d at an angle of 60º to AG. When the centreline length of D-d has been determined, draw the baseline a-g at right angles to the centreline as shown. Draw the semicircle with the centre at point d on the middle line of the pipe and divide into 6 equal parts. This gives us points 1-7 on the arc. Then draw parallel lines to the middle line through points 1, 2, 3, 4, 5, 6 and 7, thus finding points a to g and A-G.

The Development of Figure 2

On the base line lay off the line segment 1 to 2 (of the arc in figure 1) 12 times. This gives us points a to g or the circumference of the pipe socket. Draw the perpendicular lines at these points and lay off the respective line segments of figure 1, i.e. aA, bB, cC, etc. The connecting line of these newly found points is a curve. It is very important when stepping off the 12 equal arc lengths or divisions not to accumulate an error which would make the circumference longer or shorter than required.

The developments for figure III and figure IV are obtained in the same way.

Note: The pipe can also be developed by calculating it's circumference (diameter x π) and then by dividing the circumference in half, quarters, and then each quarter into three equal and accurate divisions with no accumulation or error.

1.2 Position of Joint lines

We always aim to put the joint line on the shortest side. The reason it is put there is to save time and effort. Sometimes we put the joint elsewhere for appearances of a job or to maximise use of metal. On the development shown above the joint is positioned on the line A-A as this is the shortest side of the pattern.

There are many joints in sheet metal. Some joints are called self-secured joints. This is where we use the job's own metal. Examples are Groove joint, Slip joint and Peined joint. They all have different amounts of metal involved in their assembly. It is important to allow for these joints when marking out a pattern.

1.3 Use of Construction Lines, Lettering and Numbering

Refer to module 2 – Unit 2

2.0 Development of Cylindrical Fittings

Key Learning Points

- Development of pattern for a two piece elbow
- Use of division lines
- Addition of joint allowances
- Notching
- Fixing hole positions
- Efficient drawing layout, planning and sequencing of layouts

2.1 Development of an Elbow Joint

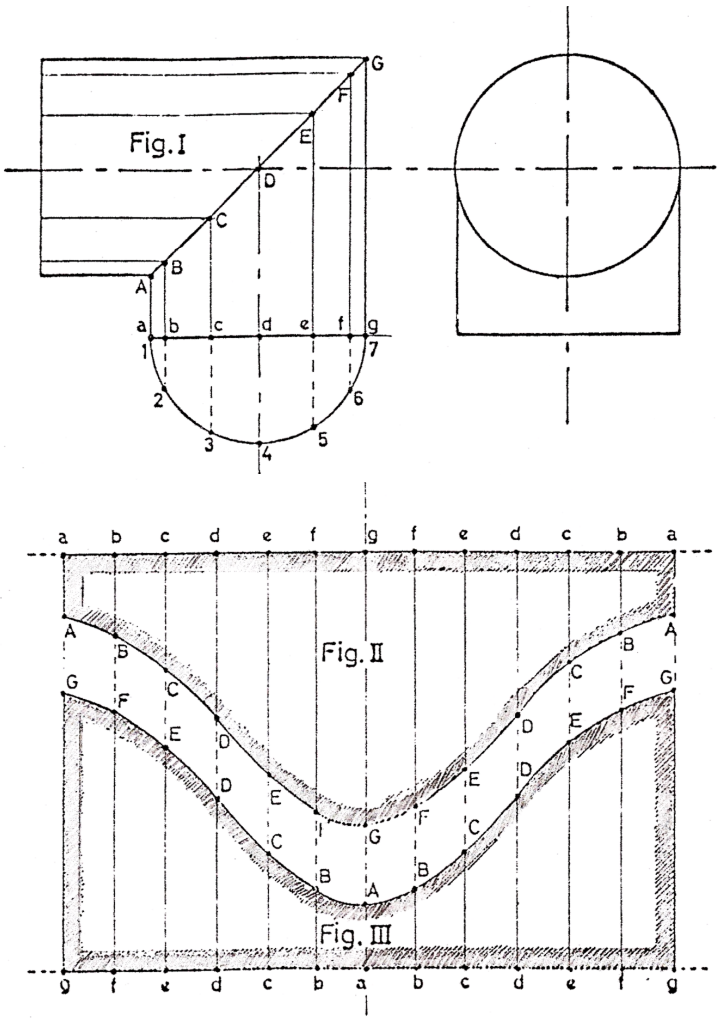

Figure I, shows the elevation.

Figure II, development of the lower socket, seam on the inside.

Figure III, development of the lower socket, seam on the outside.

After determining the outline of the elevation of figure I as mentioned in section 1 above, draw the semi-circle at point d, divide into six equal parts and through points 2 and 6 draw the so called generating lines parallel to the middle line. The joint line of the two pipe sockets is a straight line.

The development is obtained as described in table 1 by laying off the line segment 1 to 2 (or the arc in figure1) 12 times on a base line, drawing the perpendiculars at points a to g, and on these points laying off the respective line segments aA, bB, etc. of figure I. As mentioned above, it is very important when stepping of the 12 arc lengths or divisions not to accumulate an error which would make the circumference longer or shorter than required.

Note: The pipe can also be developed by calculating it's circumference (diameter x π) and then by dividing the circumference in half, quarters, and then each quarter into three equal and accurate divisions with no accumulation or error.

2.2 Development of an Offset

Figure I: Elevation.

Figure II: Development of socket A.

Figure III: Development of socket B.

Figure IV: Development of socket C.

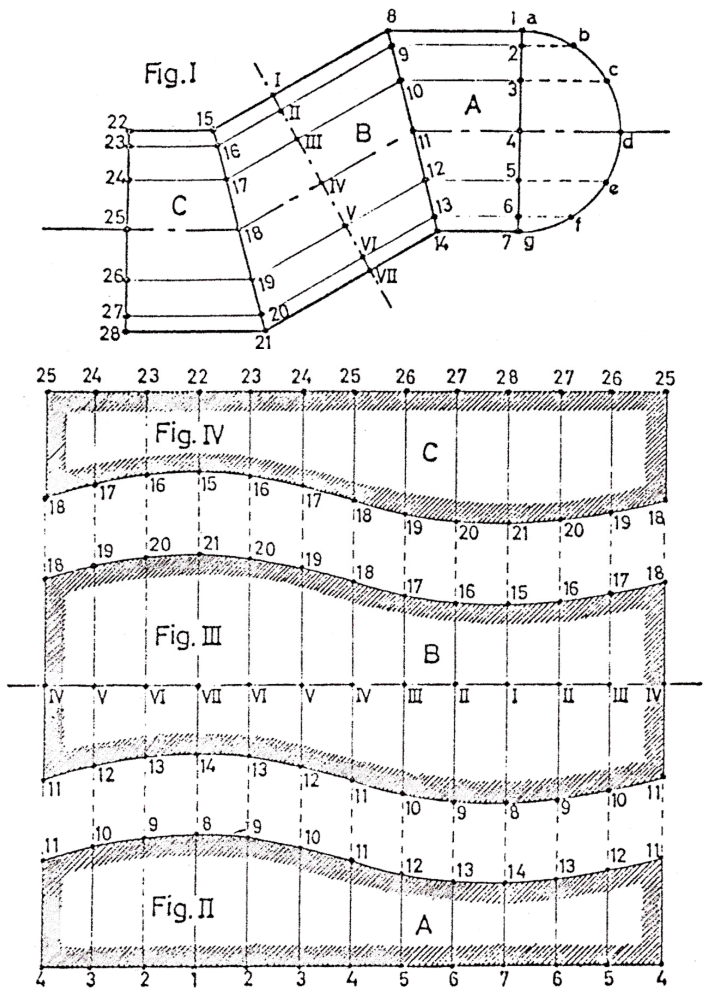

First determine the outline of the elevation of the offset in figure I and take care to give the three segments or pipes the correct diameter. Then draw the semicircle with the centre at point 4, divide it into six equal parts and through points b, c, e, and f draw the so-called generating lines parallel to the middle lines of the three segments.

The development of the two sockets A and C is described in the previous tables above.

For the development of the middle socket B draw the auxiliary line 1 to 7 perpendicular to the middle line in figure 1. This auxiliary line is constructed at a random point on the centreline 11 to 18. The generating line yields points 1 to 7.

For the development of figure III determine the base line with points 1 to 7 as usual. Draw the perpendiculars at these points and on these lines lay off the various lengths of the lines above and below the base line. All these lines should be the same length.

2.3 Development of a 90º Segmental bend -1 Full, 2 Half Segments

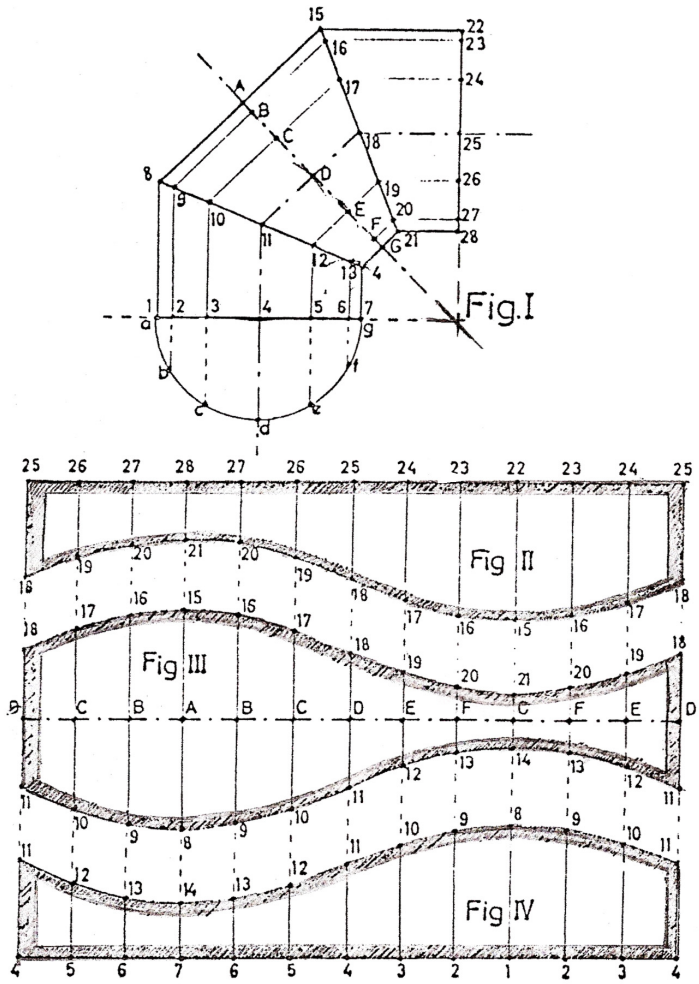

Figure I: Elevation.

Figure II: Development of the upper segment.

Figure III: Development of the middle segment.

Figure IV: Development of the lower segment.

After determining the outline in figure 1 draw the semicircle with the centre at point 4. Divide it into six equal parts and draw the generating lines parallel to the middle lines thus intersecting the mitres at points 8 to 14 and 15 to 21. The line segments 1 to 8, 2 to 9, 3 to 10, etc are the lengths needed for the development, which is performed as usual.

2.4 Development of a 90º Segmental Bend -5 Full, 2 Half Segments

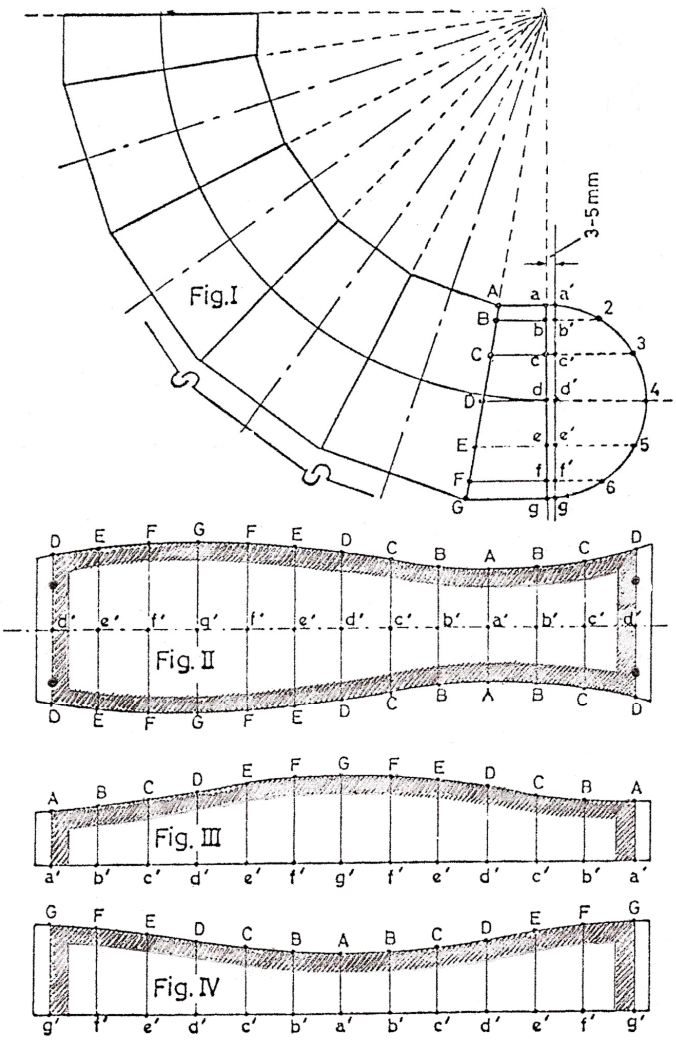

Figure I: Elevation.

Figure II: Development of a full segment, seam on the side.

Figure III: Development of a half segment, seam on the inside.

Figure IV: Development of a half segment, seam on the outside.

With the centre point S and the previously measured radius of curvature Sd in figure I draw a 90º arc and divide it into the desired number of segments observing that at the two ends only half segments are needed.

Then draw the semicircle with centre at point d and divide it into six equal parts. Draw the necessary perpendiculars, finding points A to G and a to g. Then, at a distance of 3 to 5 mm draw a parallel line to the base line a g containing points a1 to g1 (allowance for beaded piece).

The Development of Figure 2

Lay off the full circumference as mentioned in Table 1 on a base line d-d and at the found point a1 to g1 draw 13 perpendiculars. On these lines lay off on both side the respective line segments Aa, Bb, Cc etc of figure I and connect the newly found points. The developed segment then has the so-called fish shape.

The developments as in figure III and figure IV, with seams on the inside and outside respectively, are obtained in the same way. The developments differ only in order of the generating lines.

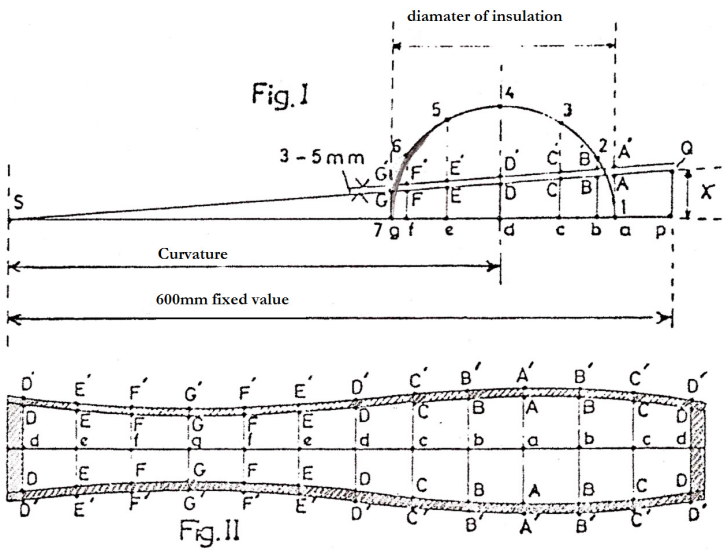

Addition for bead 3-5 mm

Addition for overlap 15 - 20mm

Number of segments	High X
4	160,8 mm
5	119,3 mm
6	95,0mm
7	79,0 mm
8	67,0 mm
9	59,0 mm
10	52,5 mm
11	47,2 mm
12	43,0 mm
13	39,3 mm

2.5 Segmental Joints (Simplified)

Figure I : Elevation.

Figure II: Development.

On the base line Sp lay off the measured radius of curvature from point to d. With d as the centre, draw a semicircle with the radius of the outer diameter of the insulation. Divide it into six equal parts and from this find points 2 to 6 and draw the perpendiculars to the base line. Lay off 600mm from point s to point p, which may be inside or outside the semicircle, and draw the perpendicular at p and lay off the respective value of x found in the chart and place at point Q. From point Q draw the connecting line S intersecting the perpendiculars of the semicircle at points A to G. The line segments aA, bB, etc. are the parts needed for the development in figure 2.

In figure 2 the allowances for the male/female seam and for the overlap are already added.

The allowances for the beaded pieces in the elevation can be added at the base line or better still at the mitre lines as done here.

2.6 Efficient Drawing Layout and Sequencing of Layouts

Today it is customary in the insulating industry to develop fittings according to **section 2.5** above. When cutting the plates to size, metal waste and cutting can be reduced by alternatively laying the various segments one under the other. It is very important to nest the various patterns together to maximise economy of materials. Also the connection of the individual segments is almost only made with a beaded piece and counter piece as shown under the arc in figure 1. The average allowance for the beaded pieces is 8 mm, in other words 4 mm for half the development. For smaller pipes and small beaded pieces 3mm is enough of an allowance.

Refer to Module 1 – Unit 9 – Metal cladding assembly work.

Refer to Module 1 – unit 5 – General allowances for insulation and cladding.

Refer to module 1 – unit 4 – Notching, folding and joining.

Summary

Parallel line development is used to develop patterns of square, rectangular and cylindrical shapes (prisms). The method divides the surface into a series of parallel lines to determine the shape of a pattern. The top and front views are divided into twelve equal spaces. The parallel lines give us the chord lengths which are then transferred to the stretch out, which is the circumference. This is also divided into twelve equal spaces.

The circumference of a cylindrical object is determined by multiplying the diameter of the cylinder by π (3.14).

The nesting of patterns is very important to maximise the materials and reduce waste. When cutting the plates to size, metal waste and cutting can be reduced by alternatively laying the various segments one under the other. The positioning of joints is also important when nesting of patterns as the joint positions will determine the shape of the pattern and how they will fit together on the sheet.

SOLAS
An tSeirbhís Oideachais Leanúnaigh agus Scileanna
Further Education and Training Authority

Castleforbes House
Castleforbes Road
Dublin 1