Trade of Sheet Metalwork	
Module 2:	**Geometry and Pattern Development**
Unit 9:	**Triangulation**
	Phase 2

Table of Contents

List of Figures

List of Tables

Document Release History

Date	Version	Comments
01/08/06	First draft	
07/04/14	2.0	SOLAS transfer

Module 2 – Geometry and Pattern Development

Unit 9 – Triangulation

Duration – 30 Hours

Learning Outcome:

By the end of this unit each apprentice will be able to:

- Define the terms used in triangulation
- State the "golden rule" of triangulation
- Develop transformers between parallel planes
- Identify joint line positions
- Construct elliptical and oval shapes

Key Learning Points:

D	Golden rule of triangulation.
D	Pattern development using the triangulation method.
D	Methods used to find the true length of a line.
D	True length diagram.
Rk	Types and shapes of transformers.
D	Determination of joint line positions.
D	Elliptical construction.
D	Major and minor areas.
M	Calculate the surface area and perimeters of the eclipse.

Training Resources:

- Drawing instruments, equipment and materials
- Textbook: The Geometry of Sheet Metalwork
- Instructor handouts, drawings

Exercise:

Sample exercises - Figure 1, Figure 2 and Figure 3.

Key Learning Points Code:

M = Maths D= Drawing RK = Related Knowledge Sc = Science
P = Personal Skills Sk = Skill H = Hazards

1. Shown in Fig. 1 is the elevation and plan of a square to square hopper. Draw the views given and from them develop the half pattern placing the seam on XX. Scale: 1:1.

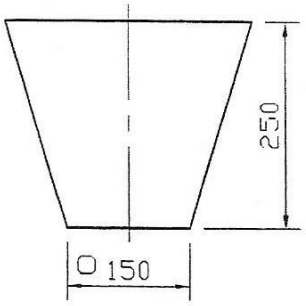

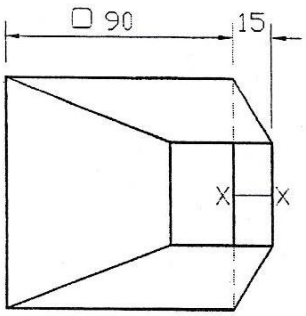

2. Shown in Fig. 2 is the elevation and plan of a rectangle to square hopper. Draw the views given and from them develop the full pattern, placing the seam on the shortest side. Scale: full size.

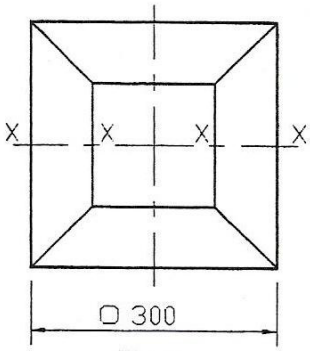

Fig 1

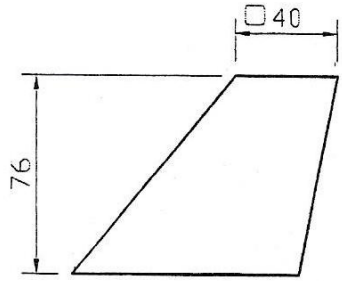

FIG. 2

3. Shown in Fig. 3 is the elevation and plan of a square to square transformer. Develop the full pattern placing the seam on the shortest side. Scale: 1:10.

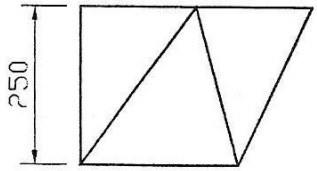

4. Shown in Fig. 4 are two views of a twisted square to square transformer. Draw the views given and from them develop the full pattern placing the seam on the shortest side. Scale: 1:5.

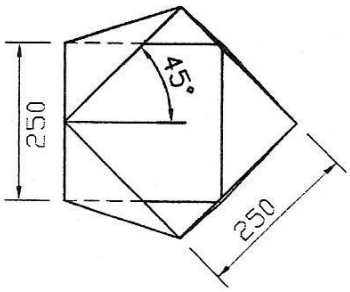

FIG. 4

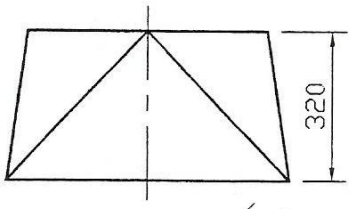

5. Shown in Fig. 5 is a twisted square to square transformer. Draw the views given and from them develop the half pattern. Scale: 1:2.

FIG. 3

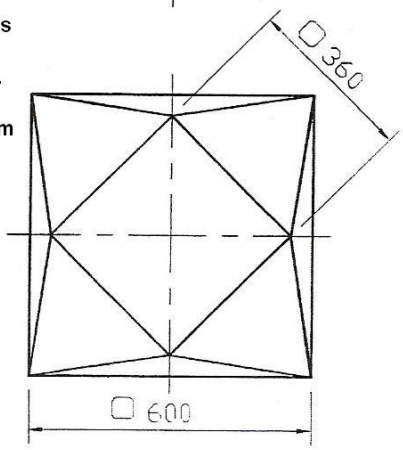

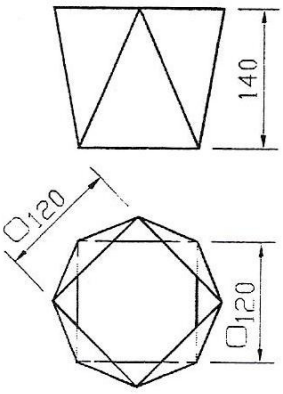

FIG. 5

Figure 1 - Triangulation 1

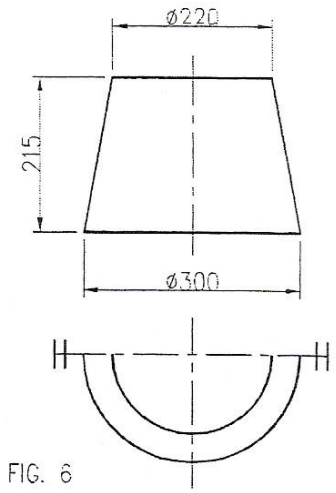

FIG. 6

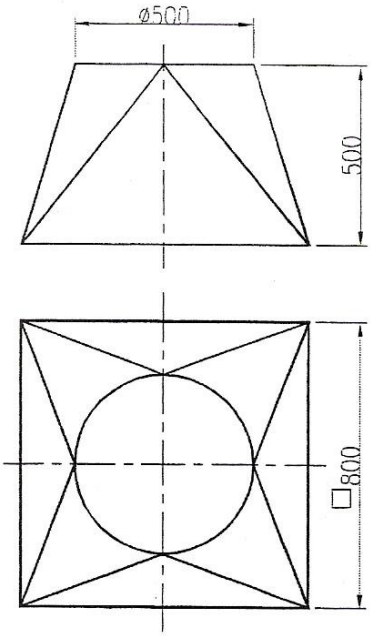

FIG. 7

FIG. 8

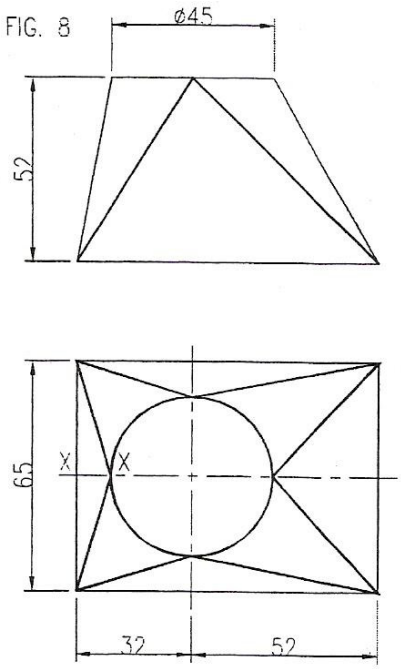

FIG. 9

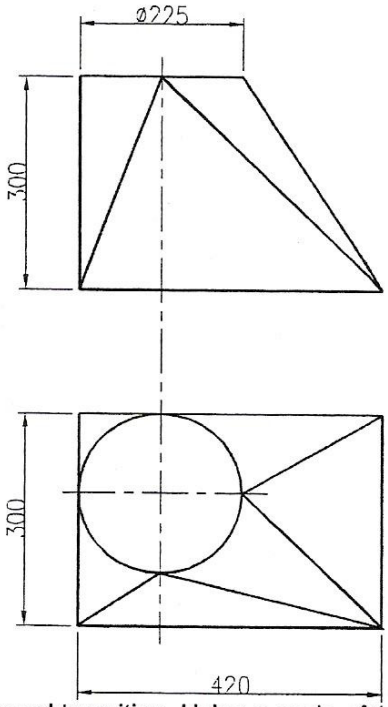

6. Shown in Fig. 6 is the elevation and half plan of a round to round transition. Using a scale of 1:5 draw the views given and develop a half pattern.
7. Shown in Fig. 7 is the elevation and plan of a square to round transformer. (a) Draw the views given. (b) Develop a half pattern. Scale 1:10.
8. Shown in Fig. 8 is the elevation and plan of an off-set rectangle to round transformer. Develop the full pattern placing the seam on XX. Scale full size.
9. Shown in Fig. 9 is the elevation and plan of an off-set rectangle to round transformer. Draw the views given and from them develop the full pattern. Scale1:5

Figure 2 - Triangulation 2

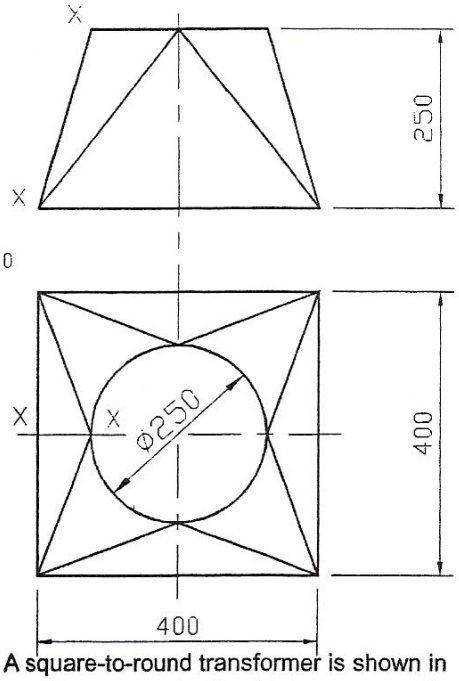

FIG. 10

10. A square-to-round transformer is shown in the two views given in Fig. 10. Develop the full template with the seam at XX. Scale: 1:5.

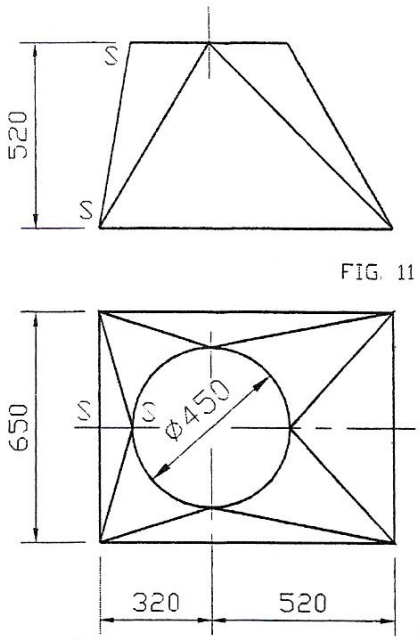

FIG. 11

11. The elevation and plan of an offset rectangle- to-round transformer are shown in Fig.11. Develop the full template, placing the seam at SS. Scale: 1:10

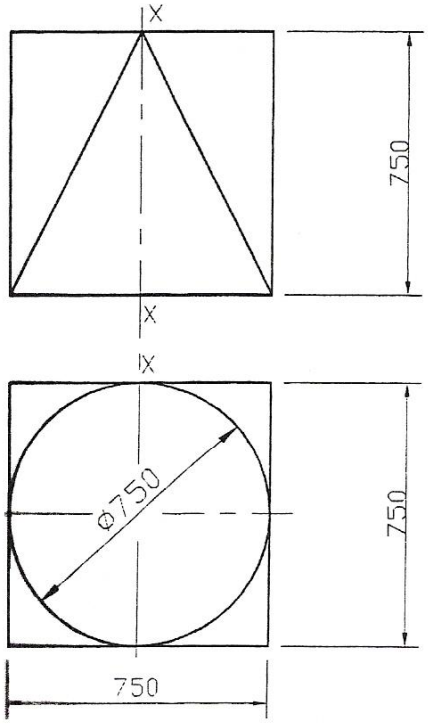

FIG. 12

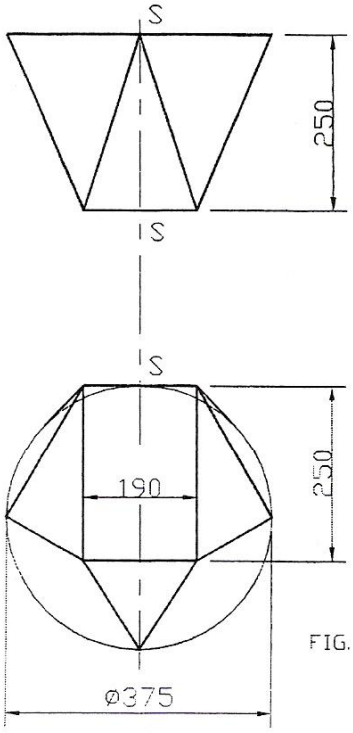

FIG. 13

12. Develop the full template for the square-to-round transformer shown in the elevation and plan in Fig. 12, placing the seam at XX. Scale: 1:10.

13. Two views of a rectangle-to-round transformer as shown in Fig. 13. Develop the full template, placing the seam on SS. Scale: 1:5.

Figure 3 - Triangulation 3

Transformers

Sheet metal workers use the terms ‘transformer’ and ‘reducer’ often. A transformer alters or modifies the shape of the cross section. The cross sectional area remains the same. A reducer, as its name implies, cuts down the area.

The above items come in various shapes, examples being Equal Taper as in Fig. 1, Off Centre as in Fig. 2, Twisted as in Fig. 3 and Flat Backed as the name implies.

Ellipse

The formula for the surface area of an ellipse is = πRr.

The perimeter may be got by placing a light piece of metal around the edge of the ellipse and measuring.

It can also be calculated by dividing the ellipse into its four different curves and calculating the length of each curve.

Self Assessment

Index

E

T