Trade of Sheet Metalwork	
Module 5:	**Ductwork**
Unit 1:	**Cylinder with Damper, Square & Rectangular Duct**
	Phase 2

Table of Contents

List of Figures

List of Tables

Document Release History

Date	Version	Comments
10/01/07	First draft	
09/04/14	2.0	SOLAS transfer

Module 5 – Ductwork

Unit 1 – Cylinder with Damper, Square & Rectangular Duct

Duration – 21 Hours

Learning Outcome:

By the end of this unit each apprentice will be able to:

- Read and interpret HVAC drawings
- Sketch ductwork
- Use the lockform machine
- Produce and fabricate a cylinder with slip joint (big end and small end) and double seam joint (machine joint)
- Produce and fabricate a rectangular duct with cross breaking and propriety flanges
- Produce and fabricate a square duct with damper and use 'S' and 'C' cleats

Key Learning Points:

H Rk	Set, use and operation of lockform machine.
Rk	Design and position of joints on ductwork and fittings.
Rk Sk	Marking-out/fabrication techniques.
Rk Sk	Tacking and closing procedure of joints on ductwork.
Rk	Damper types and fitting arrangements.
Rk	(DW144) Ductwork specifications and standards.
D Rk	Layout of HVAC drawings, abbreviations, use of scale rule, sketching.
Rk Sk	Ductwork design and quality.
Rk	Design and use of cleats.
M	Calculate allowance for double seam and lockform joints and area/weight of metal in ductwork.
Sc	Work, energy, power and friction, density/specific gravity.

Training Resources:

- Toolkit
- 0.6mm galvanised steel
- DW 143, DW/TM2. TR.7
- DW 144. DW.171.BS 5970:2001
- Workshop drawings
- Live example
- Scale rule. (metric, imperial)
- Refer to reference library
- Safety equipment and protective clothing
- Tools and machinery/equipment

Key Learning Points Code:

M = Maths D= Drawing RK = Related Knowledge Sc = Science

P = Personal Skills Sk = Skill H = Hazards

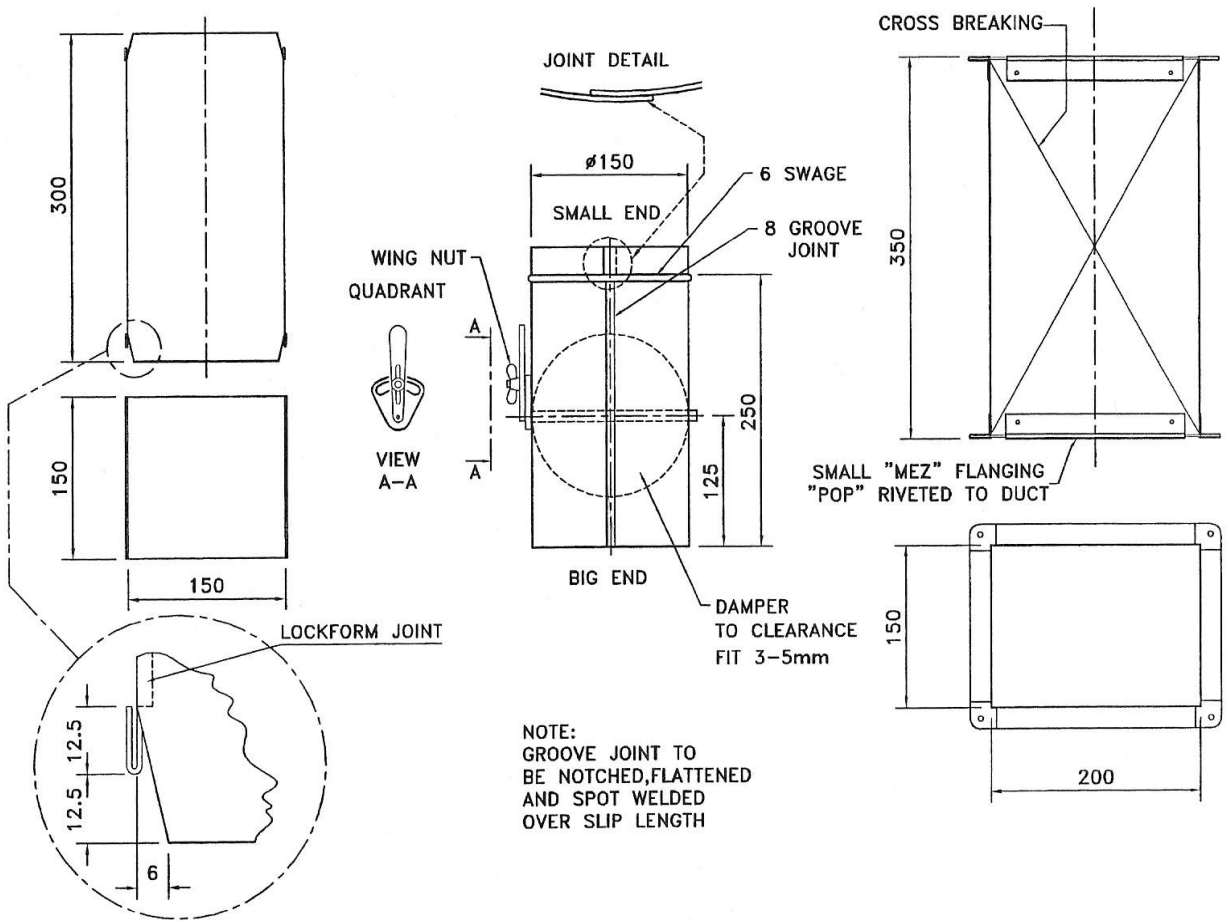

Figure 1 - Round Duct with Damper

Lockform Machine

The allowance for the lockform machine is usually 25mm for a small one and 35mm for the bigger one. There is also a small edge ranging in size from 6mm to 10mm which slots into the larger end. Some machines with age may deviate from the manufacturer's recommended allowance so trial and error may apply. Sharp edges need to be handled safely when using these machines. Gloves are needed.

Cross-Sectional Type

1. Flanging: Mez type and ordinary angle (iron)
2. Slip joints normally 25mm – 50mm in size
3. S and C cleats
4. Hand seams
5. Flexible joints; here improvement may happen as at the fan connected to the duct.
6. Angle iron edge, band iron edge

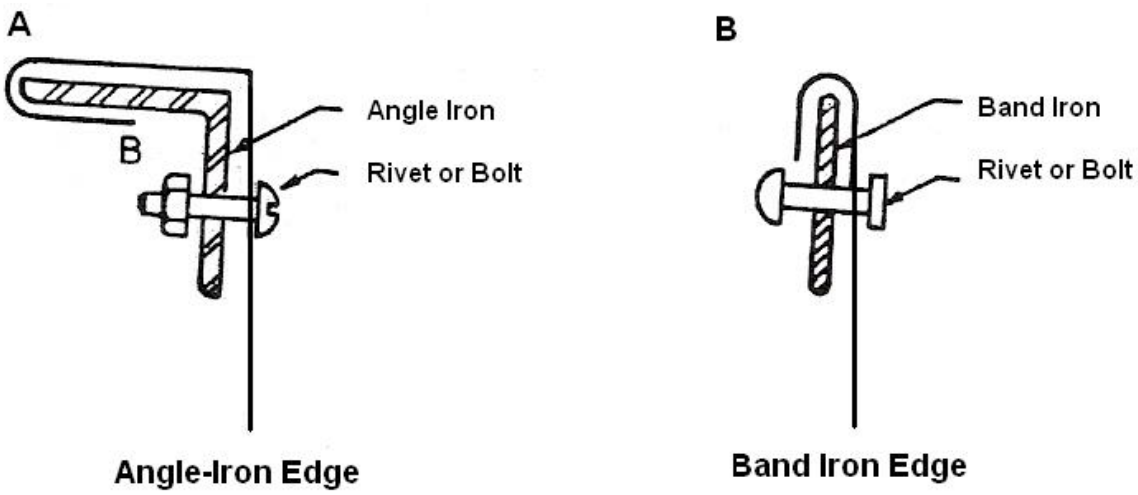

Figure 2 - Angle and Band Iron Edge

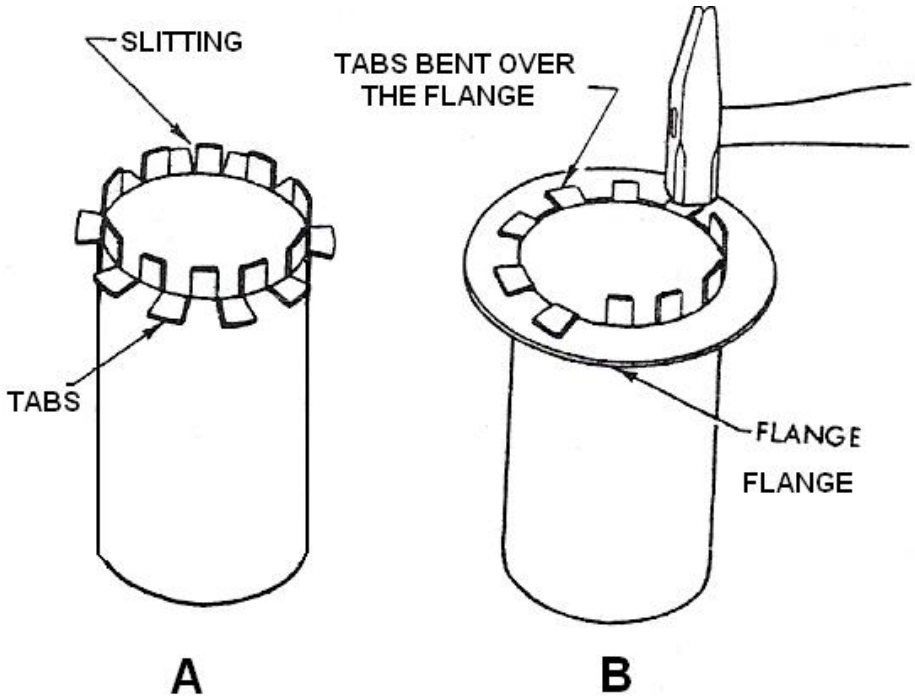

Figure 3 - Forming a Dovetail Seam

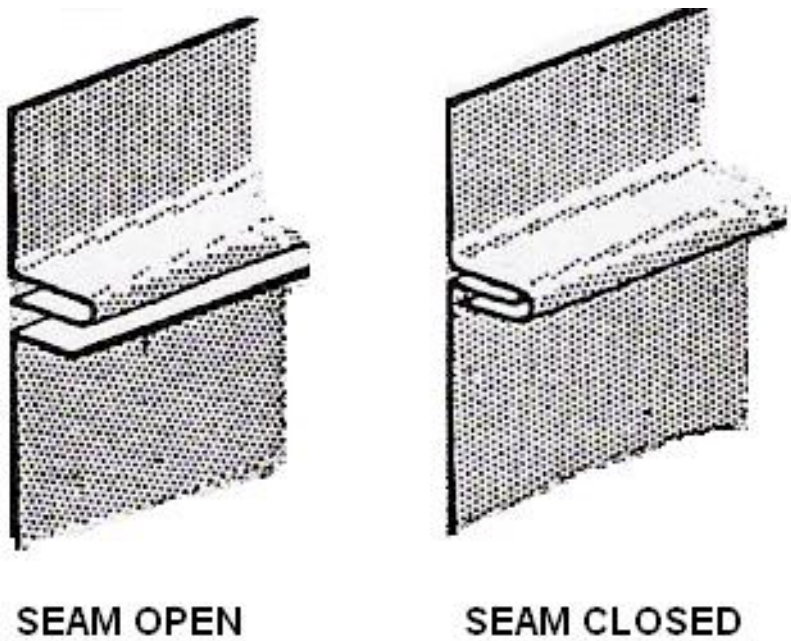

Figure 4 - Standing Seam

Some joints may fall into both categories of joint, i.e. cross-sectional and longitudinal.

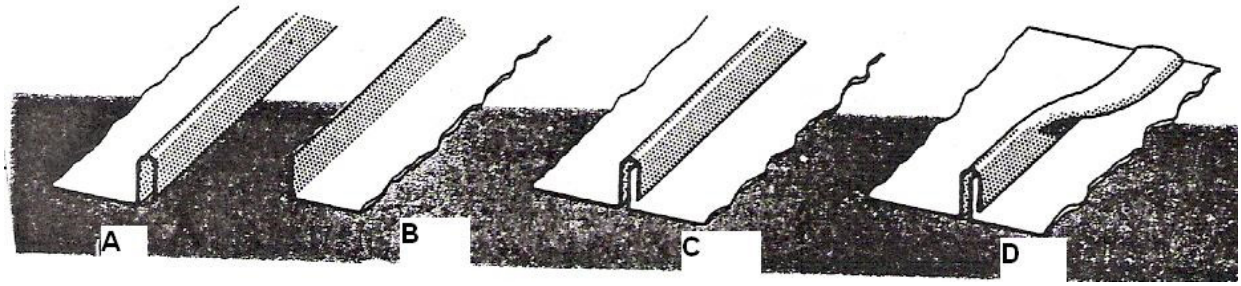

Figure 5 - Steps in Making a Hand Seam

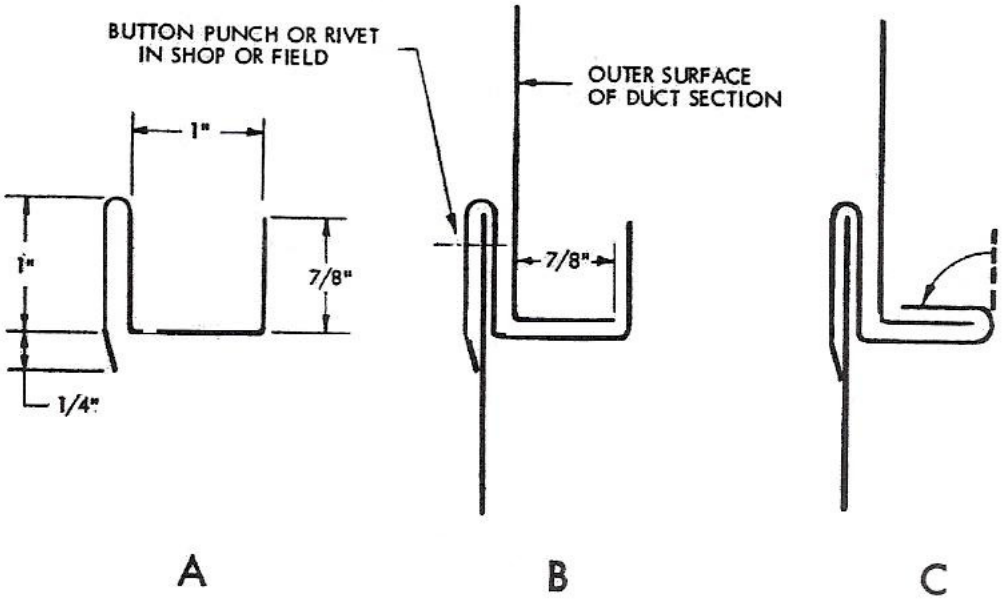

Figure 6 - Steps in Forming a Government Clip

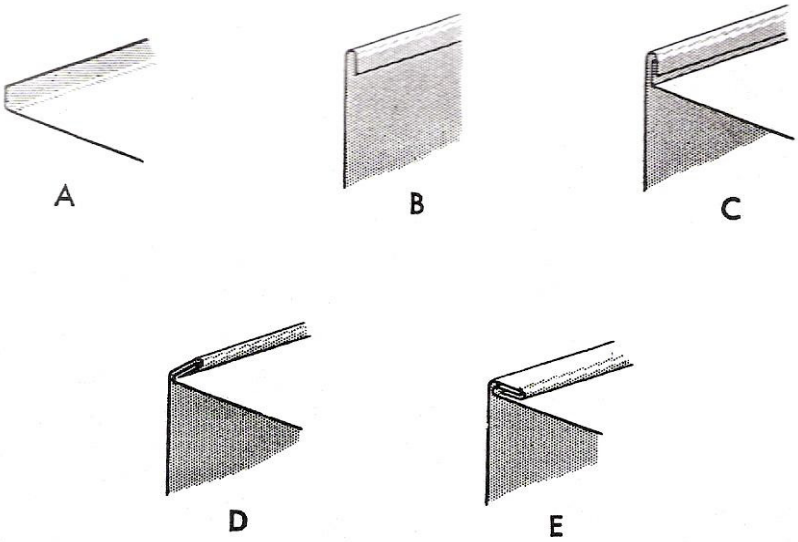

Figure 7 - Making a Double Seam

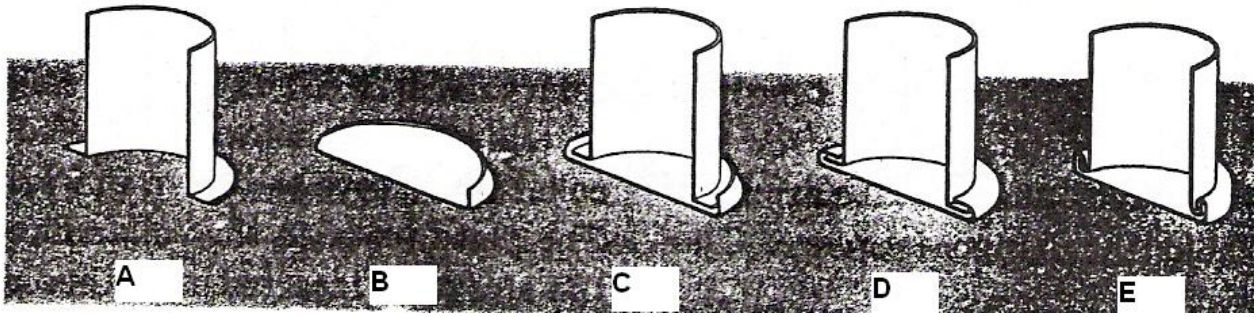

Figure 8 - Steps in Making a Bottom Double Seam

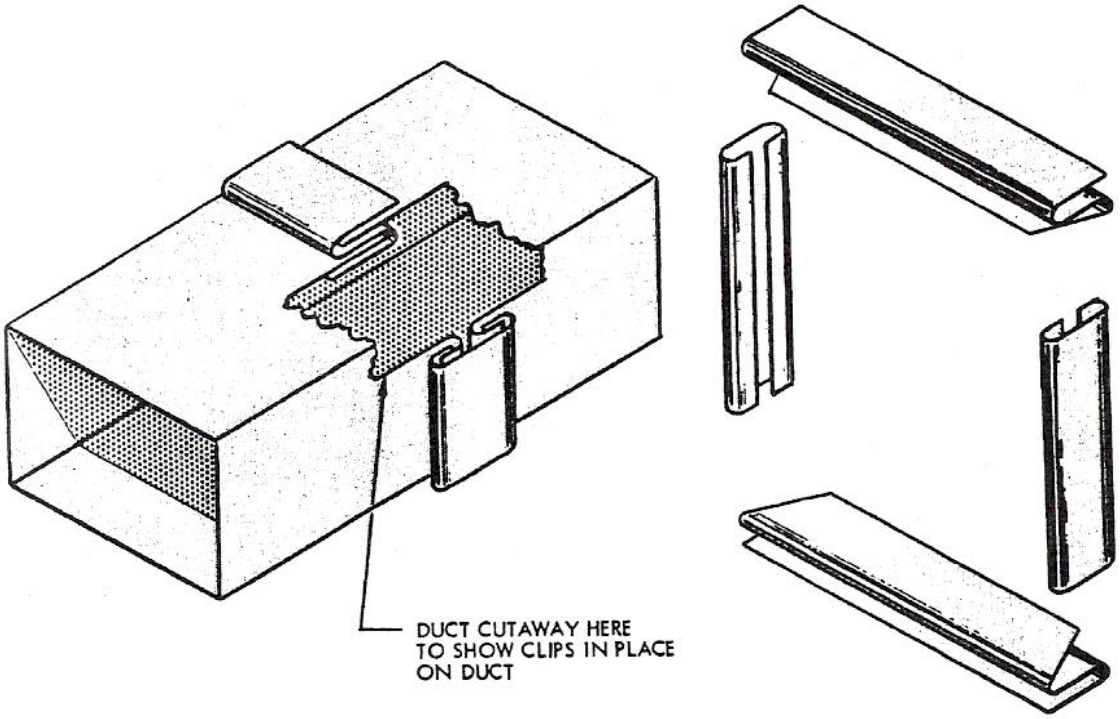

Figure 9 - S and Drive Clips used to Join Duct Sections

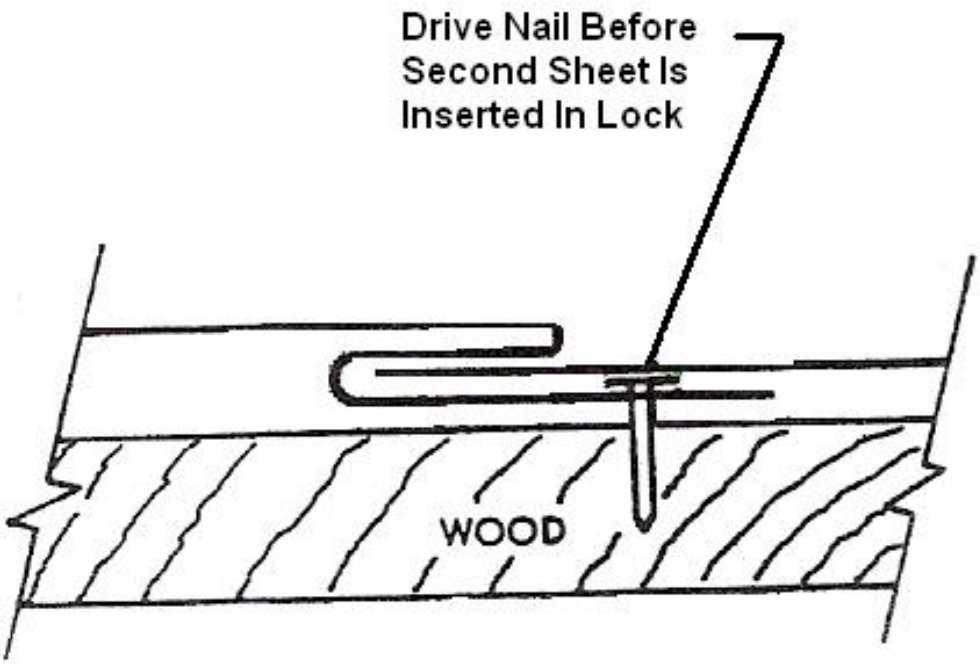

Figure 10 - S Clips used to Join Sheet Metal Pieces Covering a Wall

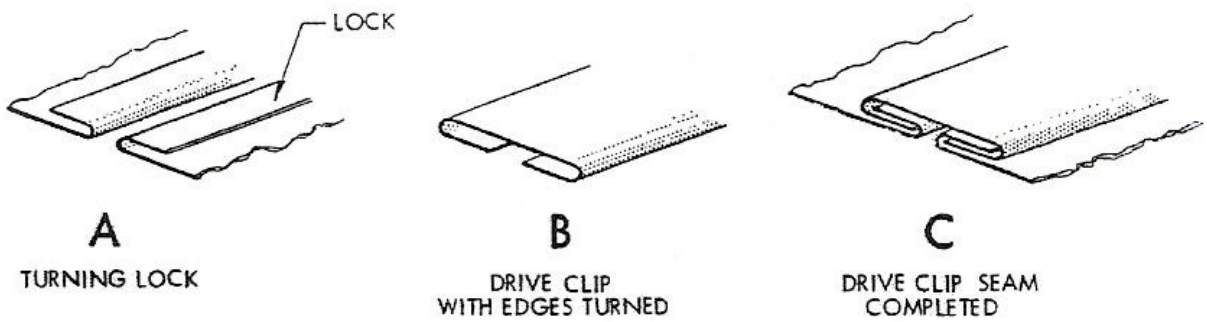

Figure 11 - Steps in Assembling a Drive Clip Seam

Longitudinal Joints/Seams

The most important thing about a joint is it does not leak. Whichever joint is used it may have to be sealed by a gasket or a sealant like mastic or even soldered. Strength and durability are also very important. It is therefore advisable to be familiar with the specifications for the job. The apprentice should have some knowledge of the manual DW/144 and have a copy at his disposal for the reasons just stated.

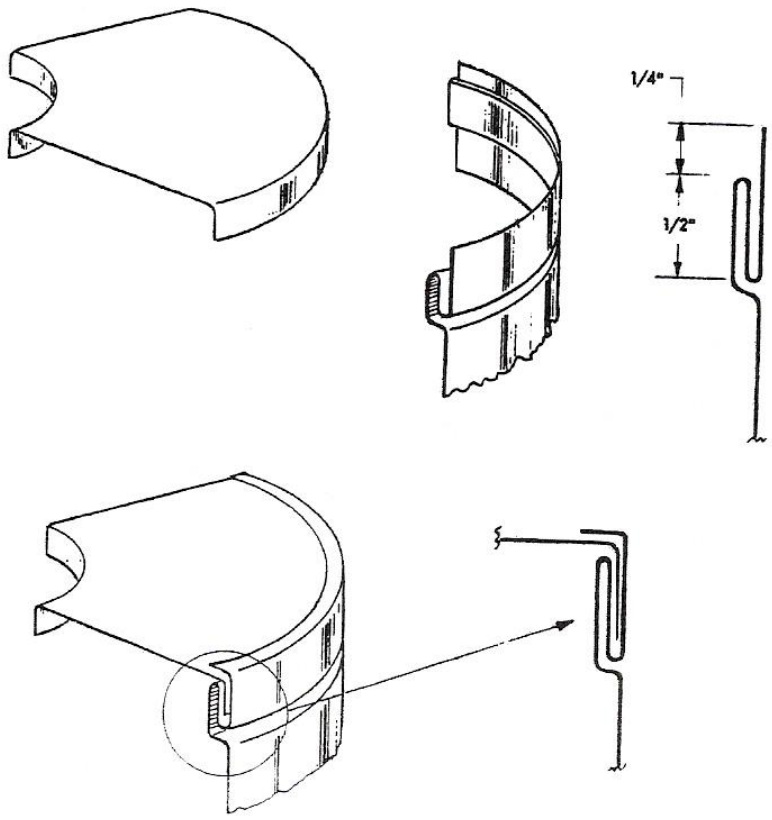

Figure 12 - Pittsburgh Seams can be Formed on Curves

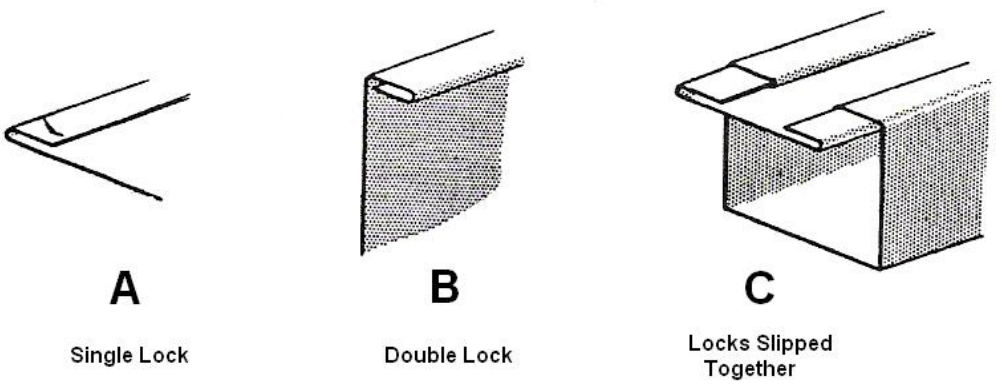

Figure 13 - Slip Joint Seam

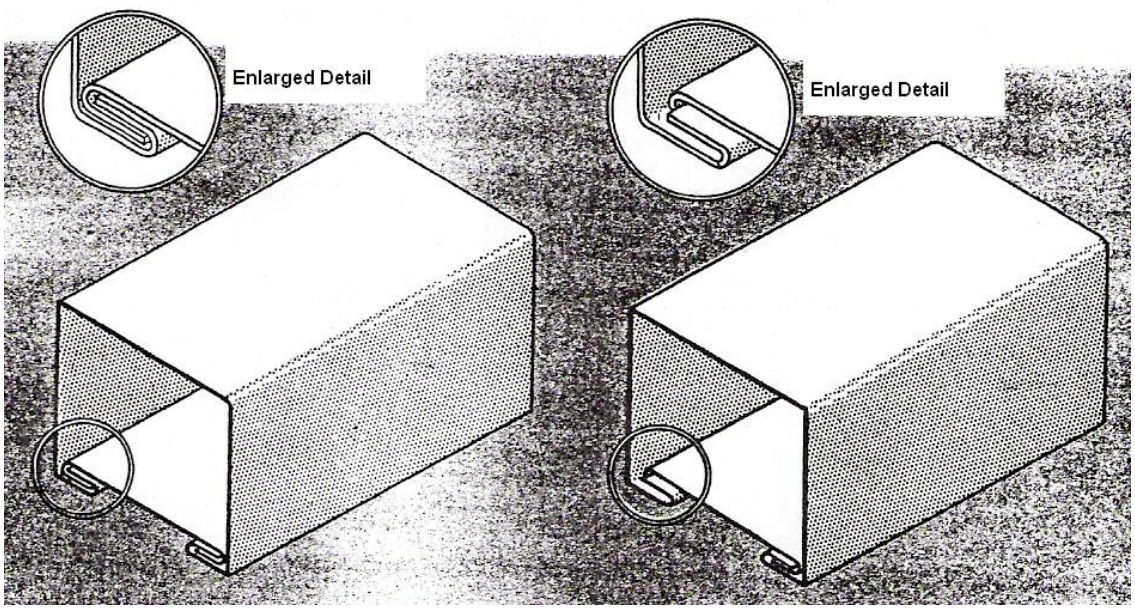

Figure 14 - Proper and Improper Joining of Slip Joint Seams

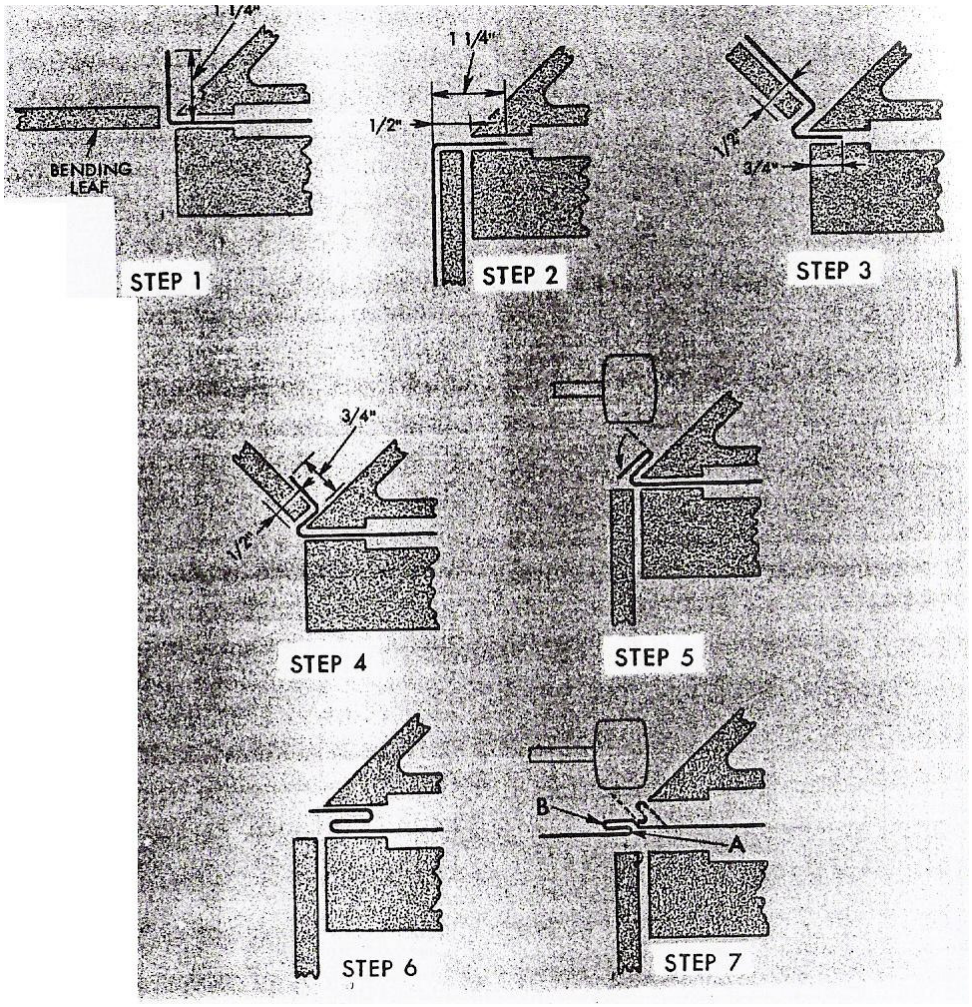

Figure 15 - Steps in forming the Pittsburgh Lock

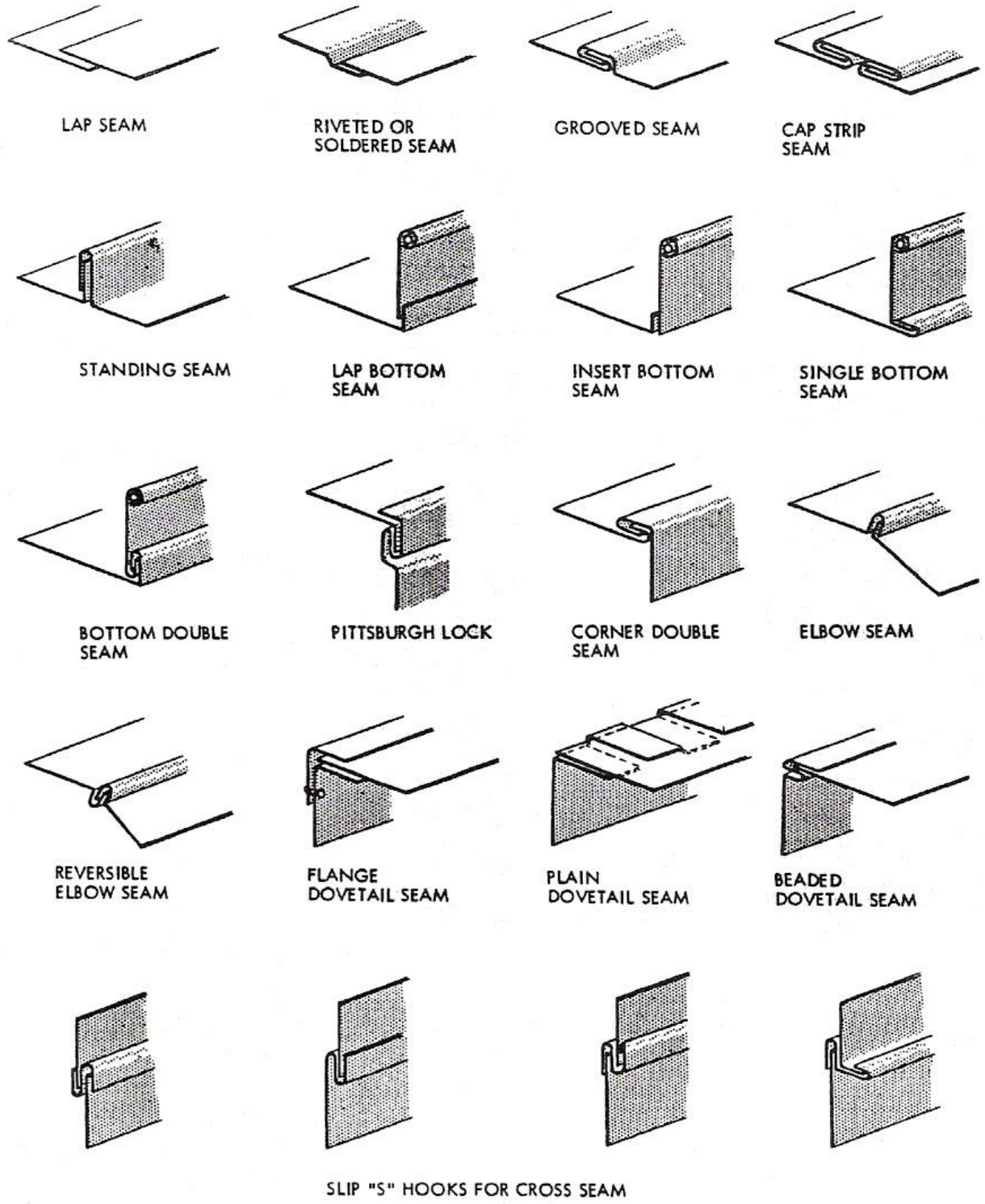

Figure 16 – Common Seams used in Sheet Metal Work

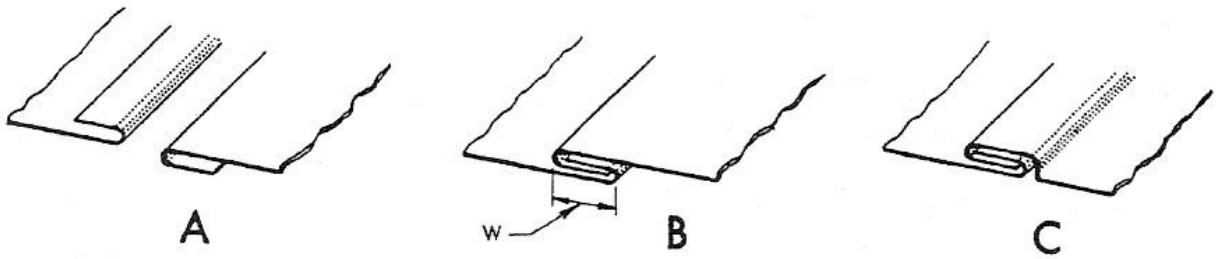

Figure 17 - Steps in Forming a Grooved Seam

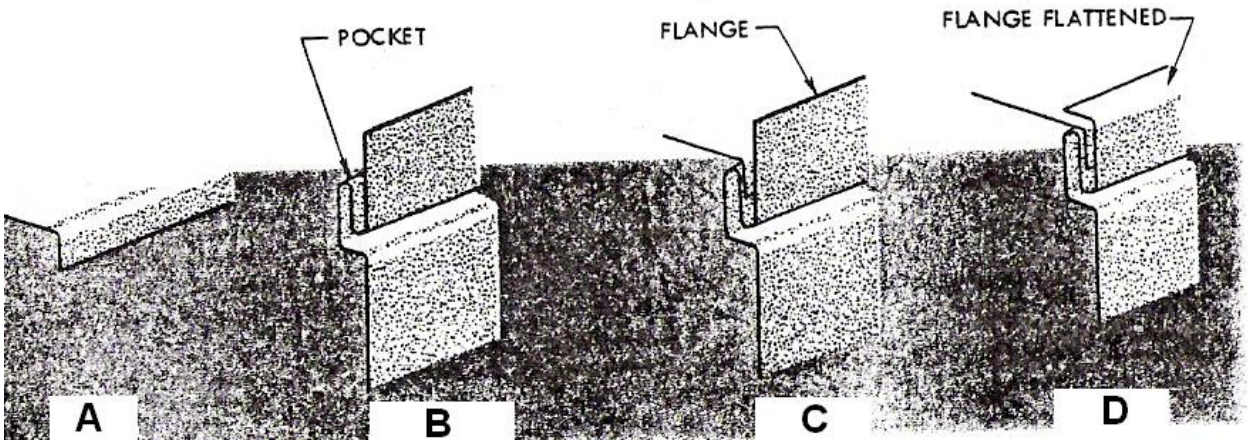

Figure 18 - Steps in Forming the Pittsburgh Seam

The Pittsburgh lock is also known as the lockform and the grooved joint/seam as the double edged joint seam.

These two seams are the more popular of the above seams. The following pages have more detail for the more commonly used joints in ductwork.

Ductwork

For ducting the most common joint is the lockform. The allowance for this varies with the machine - 35mm and 25mm are common. The lockform is a longitudinal seam as is a groove joint. The lockform or Pittsburgh lock is always positioned on a corner. Groove seams are rarely used in metal heavier than 20 gauge.

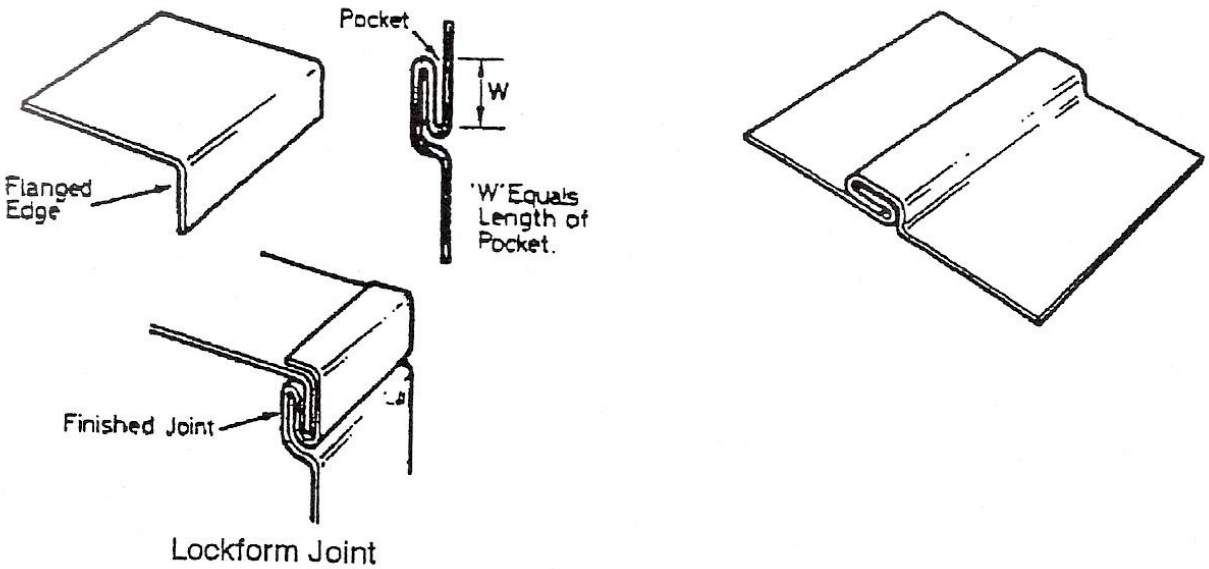

Figure 19 - Lockform Joint

Standing Seam

Standing seams are used on large site ducting and of sheets of metal to connect and stiffen the metal. This joint eliminates the need for angle iron reinforcement.

The seam comes in various sizes and is secured with rivets or bolts at intervals.

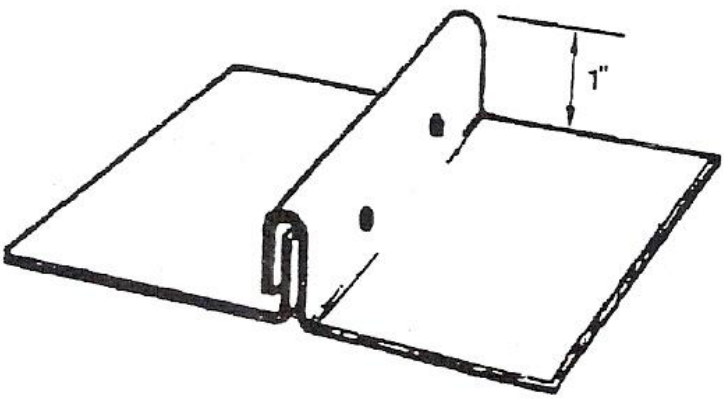

Figure 20 - Standing Seam

Dovetail Seam

A dovetail seam is used to connect a round pipe to a square or rectangular duct. In construction it consists of a series of tabs cut into the end of the pipe, with every other tab bent out at a 90° angle. The usual size for these cuts is about 3/8" wide and 3/8" deep. The size of these tabs will vary with the size of the pipe.

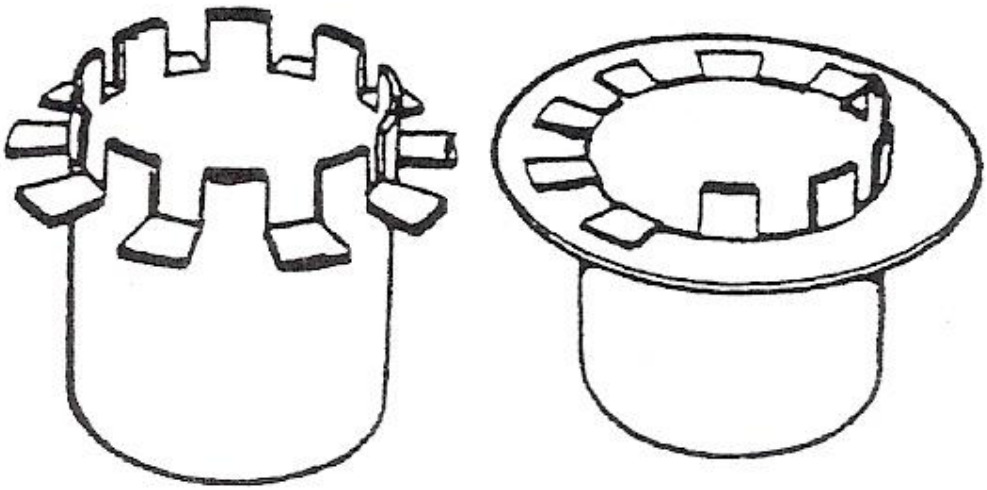

Figure 21 - Dovetail Seam

In the erection of ductwork, cross seam connections take the following form:

1. Slip joints (solid or "pop" riveted).
2. Angle iron flanges (bolted) and mez flanging.
3. S & C cleats (commonly known as S & Drive cleats) and where extra strength is required.
4. Standing "S" cleats (used with drive cleats) and where extra strength is required.
5. Government/cut clip (not widely used in this country but very popular in the USA).

The type of connector used is determined by the size of the duct, strength required, and the type of application. The more popular types used in this country are items 1, 2, and 3 above, but a lot depends on the specification for a particular contract.

Slip Joints

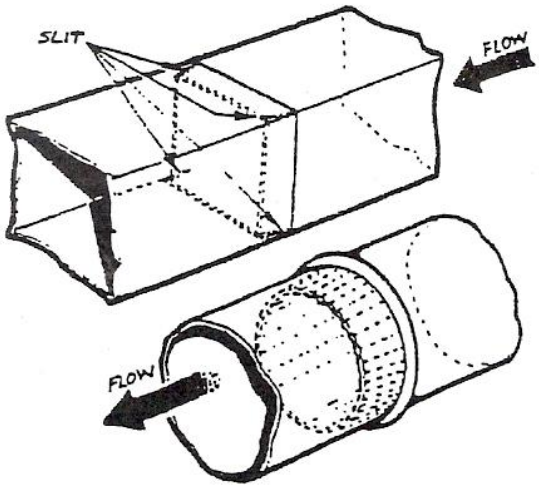

Figure 22 - Slip Joints

The usual allowance for slip joints are 25mm, 38mm or 50mm.

Slip joints are a popular way of joining square or cylindrical ducting. On cylindrical ducting the end of the pipe is usually swaged about 1½" to 2" away from the end. It is then crimped (reduced) to sit into the end of the next section of ducting. Another way to do it is to make one end of the pipe or duct smaller in diameter than the other end. On square or rectangular ducting, the end of the duct is notched on the corners to allow it to slip into the end of the next section of ducting. It is then sealed and riveted. Slip joints are usually used on small size square or rectangular ducting.

“C” Cleats

"C" Cleat (or drive cleat as it is known). This cleat is generally used in connection with S cleats for connecting cross seams on ducts. It is generally used on the short side of the duct.

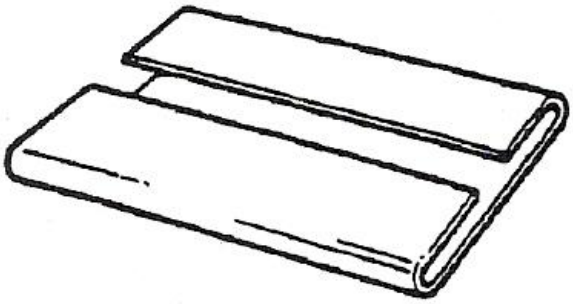

Figure 23 – “C” Cleat

“S” Cleats

"S" Cleats are used in conjunction with "C" or drive cleats on the cross seams of ductwork. You may have a plain "S" cleat, hemmed "S" cleat, or the standing "S" cleat where extra strength is required.

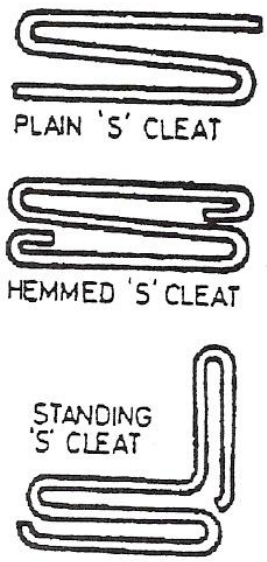

Figure 24 - "S" Cleats

Peened Joint

Peened joint is also known as paned joint. The paned or peened joint is used as a simple means of attaching a bottom to an article of cylindrical or conical shape, and it can also be used to secure the segments together in a lobster back bend. The allowance for this joint can very slightly from craftsman to craftsman.

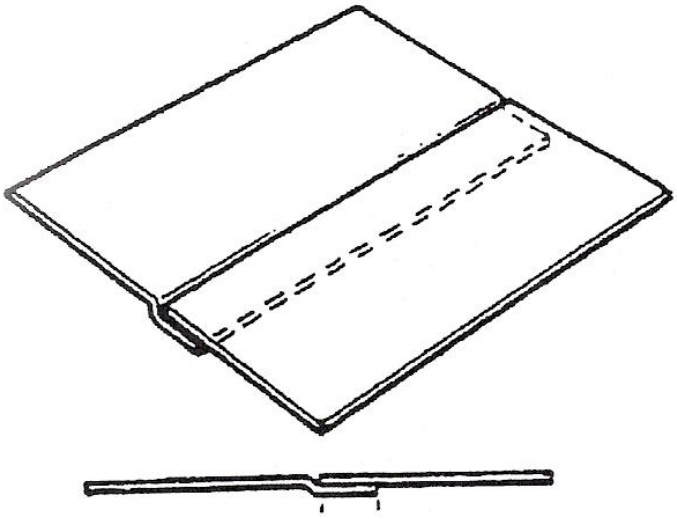

Figure 25 - Joggled Lap Seam

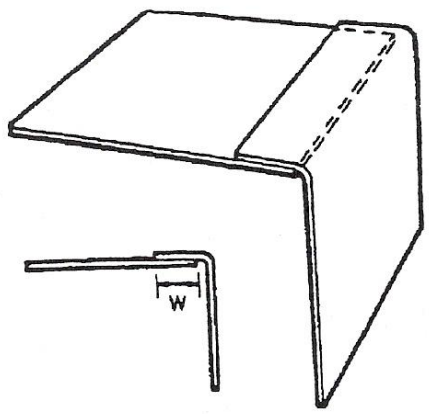

Figure 26 - Corner Seam with Lap on the Outside

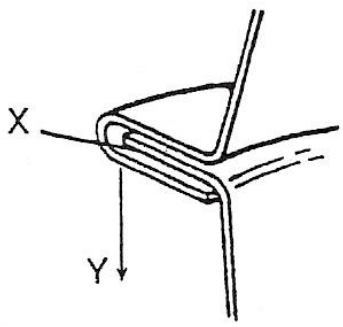

Figure 27 - 6mm Paned-Down Joint

W = 6mm

X = 6mm - 0.5mm = 5.5mm

Y = 6mm + 0.5mm = 6.5mm

Total: 3W or 18mm

(12mm + 6mm)

Allowance for Peened Joint

A general method would be to leave a single edge on one side of the pattern (this would be the size of the peened joint) and on the other of the pattern leave a double edge (this would be twice the size of the peened joint). On making the paned joint, the thickness of material will have to be taken into consideration to finish the joint properly.

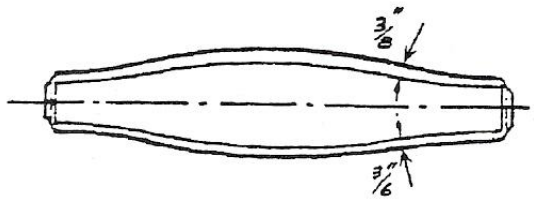

Figure 28 – Allowance for Peened Joint

Abbreviations used in Ductwork

AF	=	Airflow
VCD	=	Volume Control Damper
CFM	=	Cubic feet per minute
F.P.M.	=	Feed per minute
TA	=	To above
FD	=	Fire Damper
HVAC	=	Heating, Ventilation Air Conditioning
AHU	=	Air Handling Unit
DIA	=	Diameter
I.D.	=	Inside Diameter

DW/144

Ductwork/144 the name given to the design specifications approved by the Heating & Ventilation Association. It makes reference to bend radii, rivet spacings, cross checks on ducts and what size mez flange is required. Its idea is to raise quality and have a standard which no contractor should fall below.

Dampers

There are three types to be aware of:

1. Fire damper, which closes if the temperature rises too high. The reason for this high temperature may be a fire. The idea is to prevent air (oxygen) feeding the fire;
2. Volume control damper, which may be closed partially or fully by mechanical means to reduce or stop air flow;
3. Smoke damper, which restricts the speed of smoke.

Noise

To reduce noise in duct systems a flexible connection may be used when connecting fans to the duct. Baffles, which reduce noise, may also be fitted. The inside of the duct may also be lagged which will help insulation as well as noise reduction. Sharp bends should not be in the system. If they already are, their turning vanes should be installed to reduce noise.

The following pages refer to the DW/144 standards concerning dampers and they also give examples of component drawings and abbreviations.

Regulating Dampers

General

Balancing dampers and control dampers are elements inserted into an air distribution system, or elements of an air distribution system. Balancing dampers permit modification of the air resistance of the system and consequently changing of the airflow rate. Control dampers control the airflow rate and in addition provide low leakage closure of the airflow.

The designer shall specify damper locations and select the damper type, as defined in "Types of Airflow Control Damper" below, appropriate to the airflow, pressure and acoustic characteristics.

Balancing Damper

To achieve the required distribution of air in the ductwork system at inlets and/or outlets. For this purpose, the damper blades are set and locked manually in any required position between fully open and fully closed.

Control Damper

To secure dynamic control of the air flow in the ductwork system. In this function, the damper will always be power - actuated and may require to be modulated between fully open and fully closed, and to be capable of taking up any position between these extremes. In the fully open position, the damper should have a minimum pressure drop. In the fully closed position, it will not necessarily achieve a complete shut off.

Types of Airflow Control Damper

Air flow dampers of various types are available for specific purposes as follows.

Single-Blade Dampers (Single or Double Skin)

Single-blade dampers shall consist of a single pivoted blade contained within a casing or section of ductwork. The blade shall be adjustable through a nominal 90° angle by means of a quadrant or similar operating mechanism. Where automatic control of the damper is required the spindle shall be extended to enable a powered actuator to be mounted.

Single-blade dampers (single-skin section) shall have a maximum duct width of 300 mm and a maximum duct height of 300 mm for rectangular ducts; and for circular ducts a maximum diameter of 315 mm.

Single-blade dampers (double-skin section) are suitable for use in rectangular ducts, and shall have a maximum duct width of 1250 mm and a maximum height of 300 mm.

Multi-Blade Dampers (Single or Double Skin) Parallel or Opposed Blade

Multi-blade dampers shall consist of a number of pivoted blades contained within a casing. The blades shall be adjustable through a nominal 90° angle simultaneously by interconnected linkage or gears, connected to a quadrant or similar operating mechanism. Where automatic control of the damper is required a spindle shall be extended to enable a powered actuator to be mounted.

There is no restriction on the size of duct in which multi-blade dampers or damper assemblies may be used. Where dampers are required for blade lengths in excess of 1250 mm, the blades should be suitably reinforced or supported. No individual damper blade should exceed 200 mm in width.

Iris Dampers

Iris dampers shall consist of a number of radially inter-connected blades which open or close within a casing with duct connection spigots. The blades shall be simultaneously adjusted by a quadrant or similar operating mechanism.

Iris dampers should be installed as specified by the manufacturer's operating and installation instructions, where the product is unidirectional with regard to airflow.

Iris dampers are available for circular ducts only, in diameters up to 800 mm (It should be noted that the damper casing is approximately twice the diameter of the duct).

Backdraft Dampers

Air pressure operated unidirectional rectangular (single or multi-blade) with adaptors if fitted to circular or oval ducts.

Hit and Miss Dampers

Two parallel adjacent plates each with multiple openings sliding against each other. The openings are designed to provide 50% air volume flow rates when they fully coincide. Used for simple operations up to 400 mm longest side.

Slide and Blast Gate Dampers

A damper used as a shut off facility, normally for use in circular ductwork with an external slide housing allowing a blade to be fully inserted to fully extended for maximum air flow.

Generally available in cast/pressed formats up to 355 mm diameter and normally used in industrial exhaust applications.

Construction

Materials

Dampers shall be constructed from steel, stainless steel, aluminium or synthetic materials.

All products should be protected against corrosion as necessary and supplied in a fully finished condition a specified by the designer.

Dampers used in Low and Medium Pressure Systems

The following recommendations apply to dampers forming an integral part of ductwork with pressure classification A and B air leakage limits.

The dampers shall be constructed to prevent distortion and jamming in operation. The blades shall be sufficiently rigid to minimise movement when in the locked position.

The blades shall be securely fixed to the operating mechanism. Spindles shall be carried in either non-ferrous, synthetic or roller bearings. All balancing dampers shall have a locking device located on the outside of the case and shall give clear indication of the actual blade position. All penetrations of the duct shall be fitted with suitable seals where necessary.

Dampers used in High Pressure Systems

Regulating dampers used in ductwork systems to pressure classification C shall meet the construction requirements specified in “Materials” and “Dampers used in Low and Medium Pressure Systems” above with operating mechanisms out of the airstream.

Proprietary Types of Damper

The use of any specific type of proprietary damper shall be confirmed by the designer. In all cases, proprietary dampers shall meet the relevant requirements of this specification.

Damper Casings

Duct damper casings shall be constructed to meet the minimum leakage limits specified for the ductwork system to which they are installed.

In order to apply the square meterage leakage calculation as detailed in DW/143 *A practical guide to Ductwork Leakage Testing*, the reference casing area shall be taken as the perimeter size of the damper multiplied by the equivalent length of one metre, for example an 800 mm x 400 mm duct damper shall have a surface area for casing leakage performance calculated as follows; [(2 x 0.8) + (2 x 0.4)] x 1 = 2.4m² casing area.

Other performance and rating test methods for dampers and valves are specified in IS05129 and BS/EN1751, and are referenced below:

a)	Leakage past a closed damper or valve	BS/EN 1751
b)	Flow rate/pressure requirement characteristics	BS/EN 1751
c)	Operational torque testing	BS/EN 1751
d)	Thermal transfer testing	BS/EN 1751
e)	Regenerated sound power levels	ISO 5129

Installation

Dampers shall be installed in accordance with any relevant ISO, EN or British Standard, local building regulations and national codes of practice as well as the manufacturer's recommendations.

Fire Dampers

General

Dampers are required in air distribution systems for fire containment. Generally they are called for where ducts penetrate walls or floors which form fire compartmentation. The damper assembly should have a fire resistance rating equal to that of the fire barrier it penetrates and shall be fire tested and rated to the time/temperature curve of BS476 part 20 and 22.

Types of Fire Dampers

Fire dampers of various types are available for specific purposes, as follows:

Folding Curtain

Folding curtain fire dampers shall be constructed of a series of interlocking blades which fold to the top of the assembly permitting the maximum free area in the airway. The blades shall be held in the open position by means of a thermal release mechanism rated at 72°C ± 4°C.

The fire damper must be able to close against static air conditions when mounted in either the vertical or horizontal planes.

In the event of a signal from a remote sensor the fire damper blades shall be released and close the airway. A local excess temperature in the area of the fire damper shall, independent of any remote sensors, automatically release the blades and close the airway by means of the thermal release mechanism, electric solenoid or electromagnet.

Single Blade

Single blade fire dampers shall consist of a single pivoted blade within a fire resistant case.

The blade shall be released from its open position by means of a thermal release mechanism rated at 72°C ± 4°C, electric solenoid, electromagnet(s) or other device.

The blade shall close the airway by means of anyone, or combination of, an eccentric pivot, balance weight(s) and/or spring(s), the spring element being incorporated within the damper or actuator mechanism.

The fire damper shall be able to operate in either or both the vertical and horizontal planes.

Multi-Blade

Multi-blade fire dampers shall consist of a number of linked blades contained within a fire resistant case.

The blades shall be released from their open position by means of either a thermal release mechanism rated at 72°C ± 4°C, or by the force applied from electrical solenoid(s), electromagnet(s), electrical/pneumatic actuator or other device.

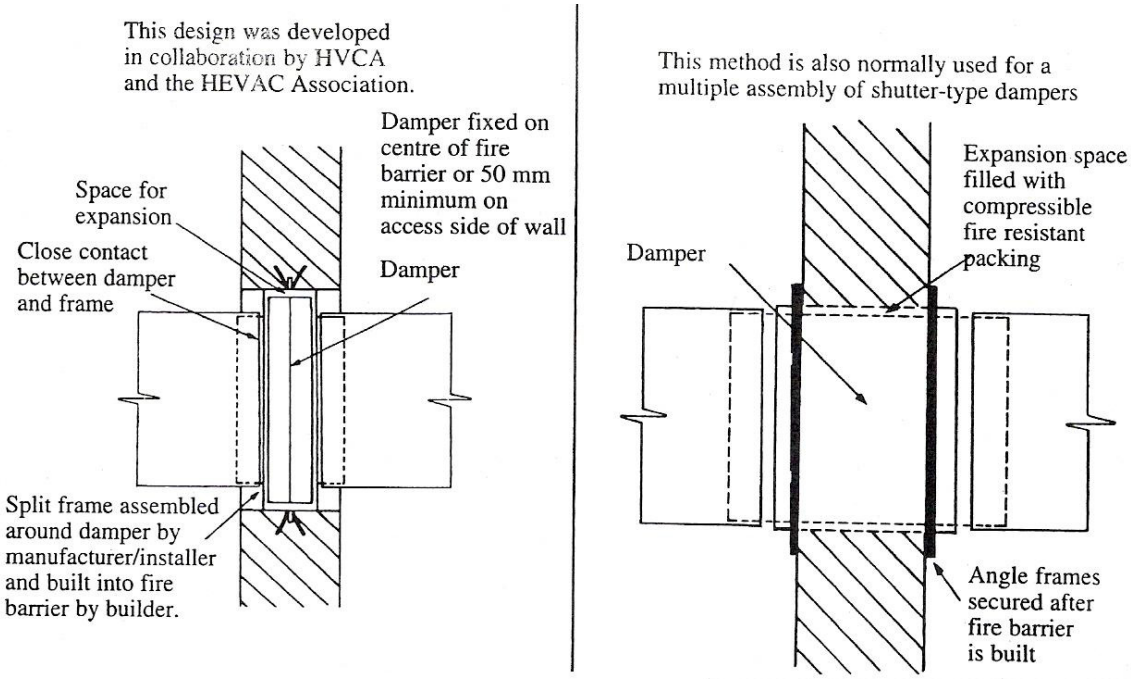

Figure 29 – Alternative Provision for Expansion

The blades shall close the airway by means of a spring(s), the spring element being incorporated within the damper or actuator mechanism.

The fire damper shall be able to operate in either or both the vertical and horizontal planes.

Intumescent

Intumescent fire dampers shall be constructed from strips of intumescent material formed into a lattice or from honeycomb material covered with intumescent paint. The damper shall fully seal when heat or flame is applied from either side. ***Note*** these devices are generally used in door/partition low velocity applications.

Materials and Construction

The damper shall be constructed from steel or stainless steel or other approved material. Steel products shall be protected against corrosion and supplied in a fully assembled condition as specified by the designer.

Air Leakage

Fire damper casings shall meet the equivalent leakage performance standard specified for the ductwork system to which they are installed.

Classes A, B and C are used to signify the leakage performance of the damper casing with the respective testing method illustrated and specified in BS/EN1751.

In order to apply the square meterage leakage calculation as detailed in the standard, the reference casing area shall be taken as the perimeter size of the damper multiplied by an equivalent length of one metre, for example an 800 mm x 400 mm duct damper shall have a surface area for casing leakage performance calculated as follows: [(2 x 0.8) + (2 x 0.4)] x 1 = 2.4m² casing area.

Location

The effective formed barrier of the damper assembly shall be located within the structural opening. Where this is not possible the section of the casing outside a fire barrier must have a fire resistance not less than that of the fire barrier and be adequately supported/protected against the possibility of displacement/damage by impact.

Provision for Expansion

Damper assemblies generally include built-in clearance frames to meet the requirement that the casing be free to expand in the event of fire. The integrity of the fire barrier is maintained either by metal to metal contact or by fire resistant packing. Acceptable arrangements are shown in Figure 29.

Installation

Damper installation shall be in accordance with the manufacturer's recommendations and the impending HVCA Publication DW/TM3 - *Guide to Good Practice*, for the design for the installation of *Fire and Smoke Dampers* and any conflict between the two should be resolved and authorised by the designer responsible for the fire damper selection.

Smoke Dampers

General

Smoke dampers shall be constructed in such a manner as to restrict the spread of smoke and other products of combustion from one occupied space to another. The blade(s) shall overlap each other and/or include edge seals. The blade(s) shall be arranged to minimise the leakage of smoke. If degradable seals are fitted, care should be taken to establish the temperature range of the material used to ensure performance compatibility. The smoke damper shall be able to operate in either or both the vertical and horizontal planes and close against dynamic air conditions.

Types of Smoke Damper

Smoke dampers of various types are available for specific purposes, as follows:

Single Blade

Single blade dampers shall consist of a blade of smoke tight material held in either the open or closed position by a mechanical linkage releasing to close or open and seal against the damper case. The blade shall be mechanically connected to the actuator (electric or pneumatic) and shall be triggered by interfacing with a smoke detector or fire control panel.

Multi-Blade

Multi blade dampers shall consist of blades of smoke tight material including the blade to blade seals, where fitted. The blades shall be mechanically linked to an actuator (electrical or pneumatic) to hold the blades in either the open or closed position. The actuator shall interface with a smoke detector or fire control panel and shall be so designed as to hold the blades close against the smoke seals, where fitted.

Materials and Construction

The damper shall be constructed from steel, stainless steel, other material or composite material with blades fitted to reduce the leakage of smoke and hot gases when the blades are in the closed position. Steel products shall be protected against corrosion and assembled in a fully finished condition as specified by the designer, in some circumstances controls may be supplied separately.

Air Leakage

Smoke damper casings shall be as in “Air Leakage”.

Installation

Damper installation shall be as in “Provision for Expansion” and “Installation”.

Combination Smoke and Fire Dampers

General

Combination smoke and fire dampers are required in air distribution systems to prevent the spread of smoke and hot gases from the fire zone and to maintain the integrity of a fire rated structure for a period compatible with that of the separating structure. They shall be tested and rated to BS476 Part 20 and 22. Reference maybe made to BS5588 Part 4 for specific smoke rating requirements.

The closure of the fire damper under action of the thermal release element shall override all other subsequent signals.

Types of Combination Smoke and Fire Damper

Combination smoke and fire dampers of various types are available for specific purposes, as follows:

Single Blade

Single blade combination smoke and fire dampers shall consist of a single pivoted blade contained within a fire resistant case.

The blade shall be released from its open position by means of either a thermal release mechanism rated at 72°C ± 4°C, or in addition operated by the force applied from electrical solenoid(s), electro-magnet(s), electrical/pneumatic actuator or other device.

The combination smoke and fire damper shall be able to operate in either or both the vertical and horizontal planes and close against dynamic air conditions.

Multi-Blade

Multi-blade combination smoke and fire dampers shall consist of a series of blades mechanically linked and connected to a damper actuator with manual, electric or pneumatic opening and spring loaded closure contained within a fire resistant case.

The blades shall be released from their open position by means of either a thermal release mechanism rated at 72°C ± 4°C, or in addition operated by the force applied from electrical solenoid(s), electro-magnet(s), electrical/pneumatic actuator or other device.

The combination smoke and fire damper shall be able to operate in either or both the vertical and horizontal planes and close against dynamic air conditions.

Materials and Construction

The combination smoke and fire damper case shall be constructed from steel, stainless steel, other material or composite material with compressible side seals fitted between the blade ends and the casing to reduce the leakage of hot gases when the blades are in the closed position.

Steel products shall be protected against corrosion and supplied in a fully finished condition as specified by the designer.

Air Leakage

Damper casings shall be as in “Air Leakage”.

Installation

Damper installation shall be as in “Provision for Expansion” and “Installation”.

Internal Duct Linings

General

Where an acoustic or thermal lining to ductwork is specified it should preferably be fitted at works. Before duct manufacture it should be clarified that specified external duct dimensions allow for the lining thickness. Any form of lining should have fire characteristics having minimum Class 0 rating and must be specified by the Designer for material type thickness, and application method.

Lining Application Considerations

Prior to the application of any lining the internal duct surface must be thoroughly cleaned to provide a dust free dry surface which may additionally be degreased.

Securing the lining to the internal duct surface can be achieved in several ways including applied adhesive, self adhesive and physical methods such as fasteners in conjunction with surface washers at a specified square pitch.

Adjacent sections of lining should abut with minimal gap and integral or separate surface finish lap to such joints and or gap filling proprietary products being applied. This procedure is to obviate any particle migration.

During application and any curing, consideration should be given to ambient temperature and humidity requirements.

In all circumstances linings should be fitted to material manufacturer's recommended methods.

Circular Ducts

Lining circular ducts is impractical and is not recommended.

Cleaning and Maintenance

Designers should be aware of the possible porous/fibrous surface nature of linings as they may present practical/hazardous problems in cleaning and maintenance. Reference in this respect should be made to the following HVCA Publications:

i. DW/TM2 *Guide to Good Practice*, *Internal Cleanliness of New Ductwork Installations*.
ii. TR17 *Guide to Good Practice*, *Cleanliness of Ventilation Systems*.

Thermal Insulation

The provision and application of thermal insulation to ductwork is not normally the responsibility of the ductwork contractor.

Where ductwork is required to be pre-insulated, the specification should be agreed with the designer.

Where the temperature of the air within the duct is at any time low enough to promote condensation on the exterior surface of the duct and cause moisture penetration through the thermal insulation, vapour sealing may be called for, and in this case the most important requirement is to limit, penetration of the seal.

The extent of any vapour sealing of ductwork thermal insulation and the support method to be used must be clearly specified in advance by the designer.

Standard Component Drawings and Abbreviations

The illustrations in this section not only highlight, where applicable, geometric limitations for the design and manufacture of ductwork components but also recommend standard drawing representation, terminology and abbreviations for both ductwork components and some of the more commonly used ancillary/plant items.

Designers and surveyors should note that bills of quantities should provide a full description.

FIG	DRAWING	DETAILS
81	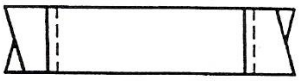	**Straight Duct** with slip joints for ducts up to 400 mm longest size
82	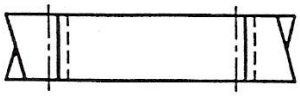	**Straight Duct** with stiffened slip joints N.B. Depending upon duct size additional stiffeners may be required
83	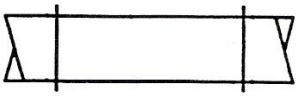	**Straight Duct** with integral or slide-on flanges N.B. Additional stiffeners may be required
84	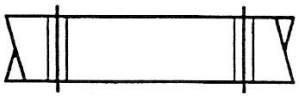	**Straight Duct** with RSA flanges N.B. Additional stiffeners may be required
85	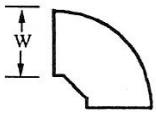	**Mitred Throat Bend** For ducts up to 400 mm wide
86	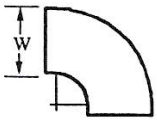 Minimum throat radius = 100 mm	**Short Radius Bend** Applies to any angle and for ducts up to 400 mm wide
87	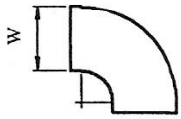 Throat radius = W/2	**Medium Radius Bend** (as illustrated) Applies to any angle **Long Radius Bend** Similar but radius = W Applies to any angle
88	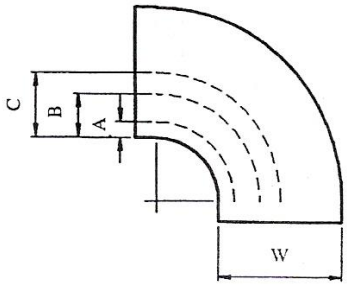 Minimum throat radius = 100 mm	**Short Radius Bend** with splitters 'W' - mm / Splitters / Splitter Position A, B, C 400–800 / 1 / W/3 / – / – 801–1600 / 2 / W/4 / W/2 / – 1601–2000 / 3 / W/8 / W/3 / W/2 Splitters not required in bend angles less than 45°

FIG	DRAWING	DETAILS
89	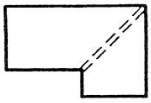	**Square Bend** with turning vanes
90		**Radius Tee** with internal splitters
91		**Radiussed Twin Bend**
92		**Swept Branch**
93	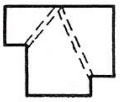	**Square Tee** with Turning Vanes
94	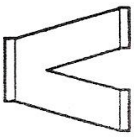	Breeches Piece

FIG	DRAWING	DETAILS
109	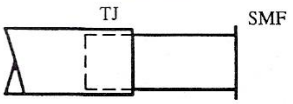	**Telescopic Joint** Illustrated with SMF – self metal flange
110	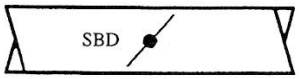	**Single Bladed Damper**
111	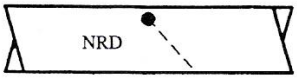	**Non-Return Damper**
112	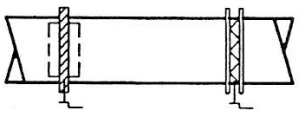 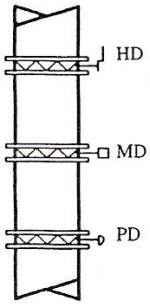	**Multi-Leaf Damper** Can be spiggoted or flanged, opposed or parallel blade Alternative controls are:- Hand Motorised Pneumatic
113	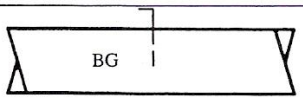	**Blast Gate Damper**
114	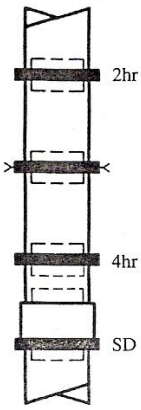	**Fire/Smoke Dampers** 2hr. Rating With installation frame 4hr. Rating Smoke damper

Table 1 - Standard Component Drawings – Rectangular

ABBREVIATION	FULL
AD	Access Door
AFF	Axial Flow Fan
AHU	Air Handling Unit
ALI	Aluminium
AP	Access Panel
ATT	Attenuator
ATU	Air Terminal Unit
BE	Blank End
BG	Blast Gate Damper
CC	Cooling Coil
CF	Centrifugal Fan
CTA	Cross Talk Attenuator
CVU	Constant Volume Unit
DP	Drain Point
EHC	Electric Heating Coil
FAI	Fresh Air Inlet
FA	From Above
FB	From Below
Flex/C	Flexible Connection
Flex/D	Flexible Duct
FC	False Ceiling
FCU	Fan Coil Unit
FD	Fire Damper
FFL	Finished Floor Level
FJ	Flanged Joint
FOB	Flat on Bottom
FOT	Flat on Top
FRP	Fire Retardent Polypropylene
GAM	Galvanised after Manufacture
GRP	Glass Reinforced Plastic
GSS	Galvanised Sheet Steel
HC	Heating Coil
HD	Hand controlled Damper
HH	Hand Hole
HL	High Level
IC	Inspection Cover
ID	Iris Damper
IU	Induction Unit
LL	Low Level
MD	Motor controlled Damper
MS	Mild Steel
NRD	Non Return Damper

ABBREVIATION	FULL
NTS	Not to Scale
OBD	Opposed Blade Damper
OE	Open End
PBD	Parallel Blade Damper
PD	Pneumatic controlled Damper
PP	Polypropylene
PRD	Pressure Relief Damper
PVC	Polyvinyl Chloride
RFC	Rolled Form Channel
RSC	Rolled Steel Channel
RU	Roof Unit
SBD	Single Blade Damper
SD	Smoke Damper
SJ	Slip Joint
ST/ST	Stainless Steel
SSL	Structural Slab Level
TA	To Above
TB	To Below
TD	Top Down (In Direction of Flow)
TJ	Telescopic Joint
TP	Test Point
TV	Turning Vane
TU	Top Up (In Direction of Flow)
UOS	Unless Otherwise Stated
UPVC	Unplasticised Polyvinyl Chloride
US	Underside
VAV	Variable Air Volume
40 SMF	Self Metal Flange (With Size)
50 RSA	Rolled Steel Angle (With Size)

Table 2 - Standard Abbreviations

Self Assessment

Questions on Background Notes – Module 5.Unit 1

1. Name three longitudinal seams.

2. Name three cross-sectional joints.

3. What is the extra material needed for a 6mm paned-down joint?

4. Give five abbreviations used in ductwork.

Answers to Questions 1-4. Module 5.Unit 1

1.

Longitudinal seams:

- Groove seam
- Pittsburgh seam – commonly known as a lock formed joint.
- Standing seam
- Single lock
- Snap lock

2.

Cross-sectional joint:

- Peine joint
- Slip joint
- Flanging
- Dovetail
- S and C cleats

3.

16mm - we use 5mm for the small piece and 11mm for the large piece. The 11mm is used with 6mm for the ledge and 5mm is knocked down around the small piece.

4.

AF	Airflow
VCD	Volume Control Damper
CFM	Cubic Feet per Minute
FPM	Feed per Minute
TA	To Above
FD	Fire Damper
HVAC	Heating, Ventilation Air Conditioning

Index