Trade of Sheet Metalwork	
Module 5:	**Ductwork**
Unit 5:	**Take-Off with Blank End and Spigot**
	Phase 2

Table of Contents

List of Figures

List of Tables

Document Release History

Date	Version	Comments
15/01/07	First draft	
09/04/14	2.0	SOLAS transfer

Module 5 – Ductwork

Unit 5 – Take-Off with Blank End and Spigot

Duration – 3.5 Hours

Learning Outcome:

By the end of this unit each apprentice will be able to:

- Produce a sketch of a take off with blank-end and spigot
- Plan job sequence
- Position and spacing of 'pop' rivets/close fitting joint
- Mark out, fabricate and assemble take-off with blank-end and spigot

Key Learning Points:

Sk	Marking out, notching, folding and assembly.
Sk	Assembly of blank-end and spigot to take off.
Rk	Pressure/ductwork design ñ suitability for purpose.
M	Calculate area/weight of metal in take-off and blank-end and spigot.
M	Pressure/ductwork design-suitability for purpose.

Training Resources:

- Toolkit
- Live example
- Workshop Drawing
- 0.6mm galvanised mild steel
- Refer to reference library
- Tools and machinery/equipment
- DW144, DW/143, DW/TM2, TR-17, DW-171, BS 5970:2001
- Metal manufacturer's weight tables
- Safety equipment and protective clothing

Key Learning Points Code:

M = Maths D= Drawing RK = Related Knowledge Sc = Science

P = Personal Skills Sk = Skill H = Hazards

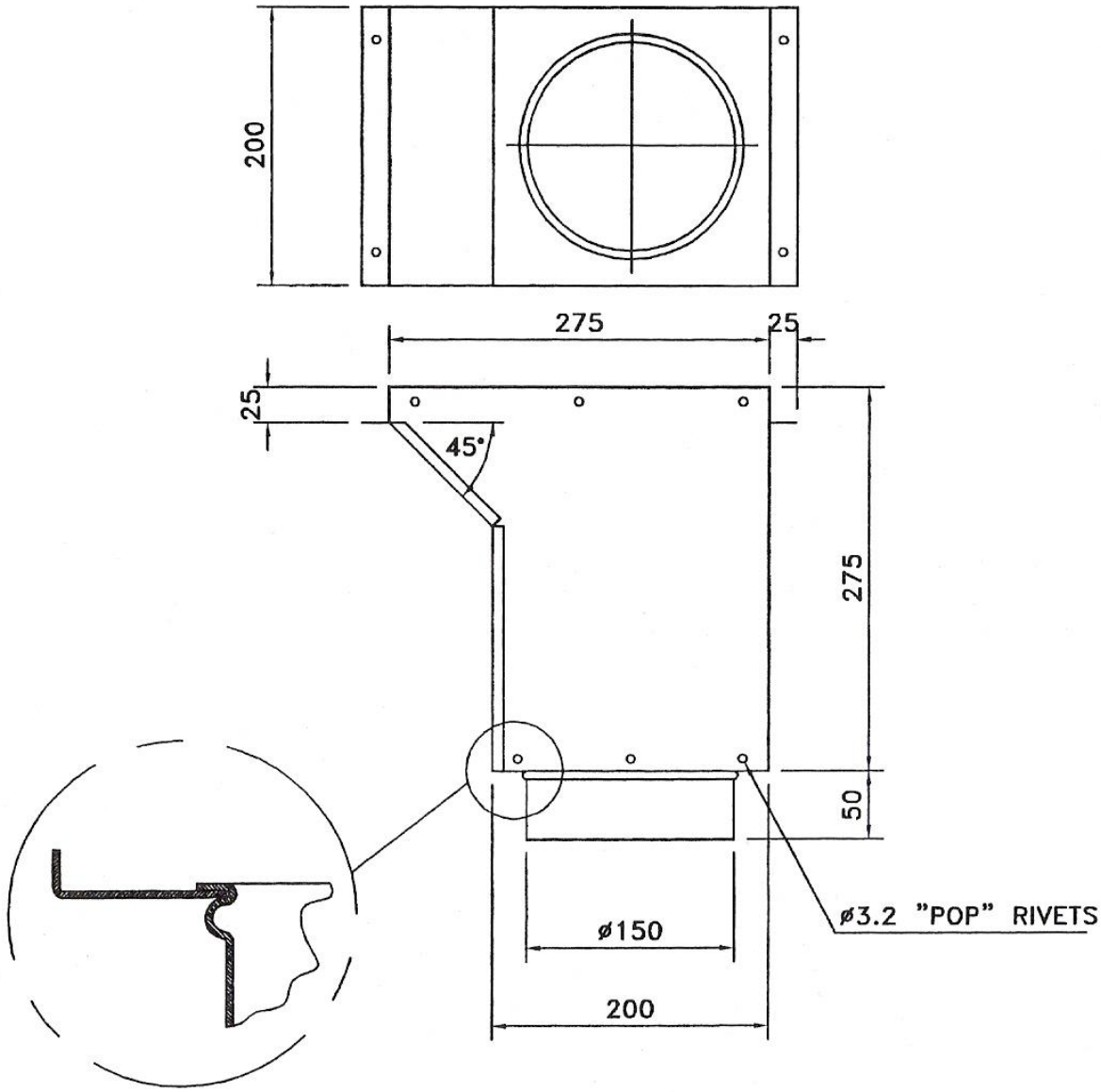

Figure 1 - Take-Off Blank End & Spigot

Area Calculation

To work out the area/metal needed we repeat the procedure explained in Unit 4, i.e. work out the blank size required and subtract the scrap area.

To obtain the metal needed for the spigot the formula $2\pi R$ or πD is used, where π = Pye.

The amount of metal needed to manufacture transitions is nearly always more than what is in the finished product. This is on account of the irregular shapes transitions tend to be. It is therefore important to subtract the scrap area when considering the weight of the finished piece. The weight of the piece will influence the strength of the brackets necessary to support it.

The thickness of the metal as well as its size will also influence the design and strength of any supporting brackets as a sheet of 24 s.w.g. is lighter than a sheet of 20 s.w.g.

Self Assessment

There are no suggested Questions & Answers.

Index

A

S