TRADE OF
VEHICLE BODY REPAIR

PHASE 2

Module 1

UNIT: 7

Galvanised Materials

Produced by

SOLAS

An tSeirbhís Oideachais Leanúnaigh agus Scileanna
Further Education and Training Authority

In cooperation with subject matter expert:

Maurice Stack

Some material courtesy of CDX Global and FENC – Further Education National Consortium.

Table of Contents

Table of Figures

Introduction

Steel has many good properties, such as its high strength and toughness and the fact that it has good ductility and weldability.

One drawback however, is that it corrodes – meaning that its surfaces are prone to attack from environmental influences. Hence the attempts to eliminate this drawback by means of a surface coating. As well as organic paint coatings, metallic coatings are applied which are impermeable to practically all liquid and gaseous media.

The following requirements are made of metallic coatings:

- The corrosion rates must be low
- Where the coating is damaged, the attack on the base metal must be reduced or suppressed by chemical or electrochemical processes

Both of these requirements are fulfilled by zinc, to a large extent. This is why galvanisation (i.e. zinc coating) is such a commonly used method of corrosion protection. The automobile industry, too has tried to solve the corrosion problem by using galvanised sheets.

Unit Objective:

Galvanised Materials

By the end of this unit each apprentice will be able to:

- State the function of galvanised coatings
- State the hazards created by galvanised coatings
- Determine the precautions needed when working with galvanised coatings
- Identify galvanised coatings on vehicle body panels
- State the type and level of galvanised coating
- Select suitable equipment for removing the coating
- Decide on the most appropriate treatment for the galvanised coating
- Remove or reduce the galvanised coating
- Select and use suitable safety equipment needed for the welding of galvanised material

Key Learning points

- Manufacturing methods
- Galvanising material
- Levels of galvanising
- Repair procedures
- Panel replacement procedures
- Removing and reducing the galvanised coating
- Health and safety, when sanding and welding galvanised material
- Welding galvanised steel

1.0 Galvanised Coatings

Its use in motor manufacturing is to protect the vehicle from rusting. Zinc has the required two-fold corrosion-inhibiting effect:

- **Formation of Protective Layers**

  Zinc is an unstable metal that rapidly becomes covered with an oxide film on exposure to air. These zinc-oxide layers undergo a further reaction when exposed to the atmosphere and it is this that gives zinc its corrosion-inhibiting effect.

- **Cathodic Protective Action**

  If two different metals are immersed in an electrically conductive fluid (= electroyte), an electric voltage is created between the two metals. If both metals are conductively inter-connected, an electric current will flow as a result of a flow of ions in the electrolyte. In this process, the ions of the less noble metal will dissolve and migrate to the more noble metal. The more noble metal will thus be completely preserved until such time as the less noble metal has been entirely used up. In the case of iron and zinc, it is zinc that is the less noble metal. In the event of mechanical damage to the surface of galvanised steel sheets, it is the resulting zinc layer that has to be scraped off first, before any corrosion attack on the steel itself is possible.

1.1 Welding Galvanised steel

The melting point of zinc is approx 420ºC and it vaporises at 906ºC. The temperature of a MAG arc, on the other hand, is between approx 3000ºC and 4000ºC.

As soon as the arc is ignited, zinc starts to vaporize in the arc-affected zone. These zinc vapours cause major turbulence in the shielding gas atmosphere, are conductive to spattering and can also lead to porosity.

The zinc vapours are damaged to health and must be extracted. Inhalation of zinc vapours leads to attacks of fever that will generally last for between one and two days (zinc fever).

Never weld without a fume extraction system!

1.2 Health and Safety, when Sanding and Welding Galvanised Material

Always use fume extraction
Always use a respirator
Always use appropriate pipe equipment

1.3 Galvanised Coatings on Vehicle Body Panels

Galvanised coatings are easily identified by its grey silvery colour. All manufacturers use it to protect the (ULASB) Ultra Light all Steel Body.

1.4 Manufacturing Methods

Light-gauge sheets and steel strip, as used in e.g. the automobile industry, are generally galvanised electrolytically. The thickness of the layer here is less than 10µm.

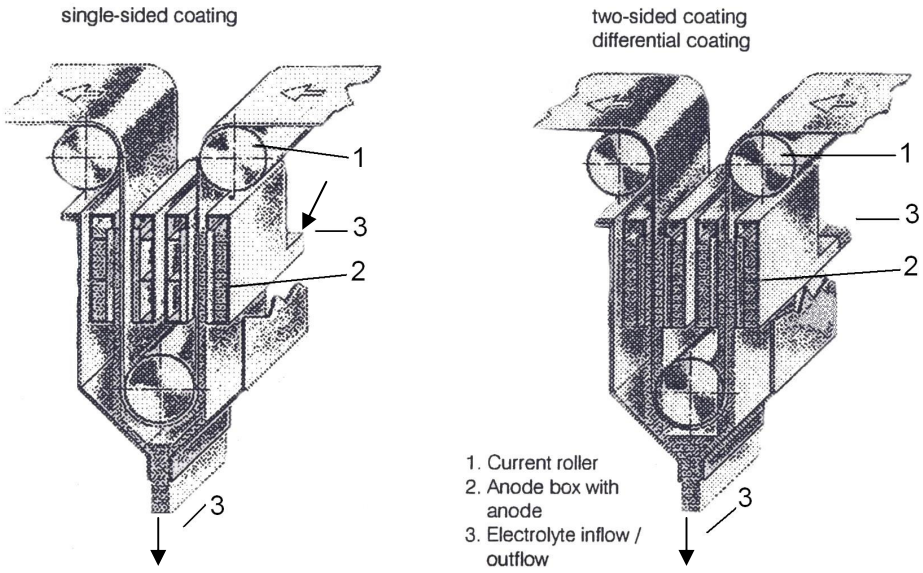

Figure 1: Production of an electrolytically galvanised light-gauge sheet

In this process, the parent sheet is drawn through an acid sulphate electroyle. In this case the sheet is the cathode and copper shoes act as the anode. The thickness of the layer is determined by the amperage and through-feed rate.

Production of a hot-galvanised light-gauge sheet

In this process, the parent sheet is drawn through a zinc bath with a temperature of approx. 500ºC. The desired layer-thickness is achieved by skimmer-jets that blow off excess zinc. In this process, galvanisation is only possible on both sides of the sheet simultaneously.

The thickness of the layer on the hot-galvanised sheets is given in g/m². The most commonly used layer thicknesses are:

- 140g/m²
- 275g/m²
- 450g/m²

The density of the zinc is approx. 7,15kg/dm³

Converting the layer thickness:

e.g. 275g/m² ÷ 7,15 = 38,46µ

Divided between 2 sides, meaning that the layer thickness is

19,23µ ~ 20 µ per side.

Note: The thickness limit for still-acceptable through-weldability of zinc layers may be regarded as approx. 20µ – although the position and type of seam play a crucial role.

1.5 Types of Galvanised Coating

The principal types of galvanisation are:

- Hot-dip galvanisation
- Electrolytic galvanisation of light-gauge sheets
- Hot galvanisation of light-gauge sheets

1.6 Levels of Galvanising

In hot-dip galvanisation, the components are immersed in a bath of molten zinc. The thickness of the zinc layer depends upon the immersion time, the composition of the steel and the temperature of the bath. As a rule, the zinc layer will be between 40 and 150µm thick (N.B 1 µm = 0,001mm). hot-dip galvanisation is normally performed after welding.

Zinc coating-thickness groups

The zinc coating thickness on electrolytically galvanised strip and sheet is given in µm per side. Internationally, the usual practise is that the designation gives 10 times the value of the rated coating thickness (ZE 10/10 =rated coating thickness 1 µm) on the top and the bottom of the sheet. Electrolytically galvanised strip and sheets can be supplied with the following coating thicknesses:

Fine coating ZE 10/10

Rated coating thickness of 1/1 µm, together with a suitable conservation coating, ensures corrosion protection for certain types of application.

Normal coating ZE 25/25

Rated coating thickness of 2,5/2,5 µm, together with a suitable conservation coating, ensures good corrosion protection.

Thicker coatings ZE 50/50 and ZE 75/75

Together with a suitable conservation coating, rated coating thicknesses of 5/5 µm (7,5/7,5 µm) ensure good corrosion protection and a stronger cathodic protective action at the cut edges than is the case with coatings of fine and normal thickness.

Single-side zinc coatings ZE 25/0,75/0 and 100/0

Rated coating thicknesses 2,5/0 µm and 5/0 µm, 7,5/0 and 10/0 µm.

Different thicknesses of zinc coating:

ZE 50/25, ZE 75/25, ZE 75/50

2.0 Seam Preparation

2.1 Repair Procedures/Panel Replacement Procedures

As already mentioned, the vapourisation reactions of the zinc may lead to the formation of pores. In overlapped joints, where the sheets lie on top of one another in parallel and without a gap, the zinc vapour can only escape through the weld pool. If the melt solidifies, the zinc vapour remains in the weld pool, and so forms pores.

Where a de-gassing gap is deliberately left, pore formation can be reduced and even completely prevented. The same is true, of course, for other seam preparations.

2.2 Removing or Reducing of Galvanised Coating

When selecting equipment, an orbital sander is the most appropriate, because it will not damage the substrate.

Never use a grinder as it will damage the substrate.

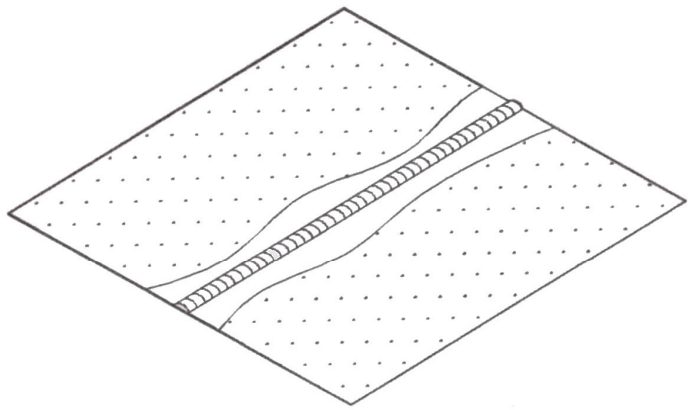

Figure 2: Removing of Galvanised Coating

Figure 3: Body Shell Panels showing Galvanised Protection

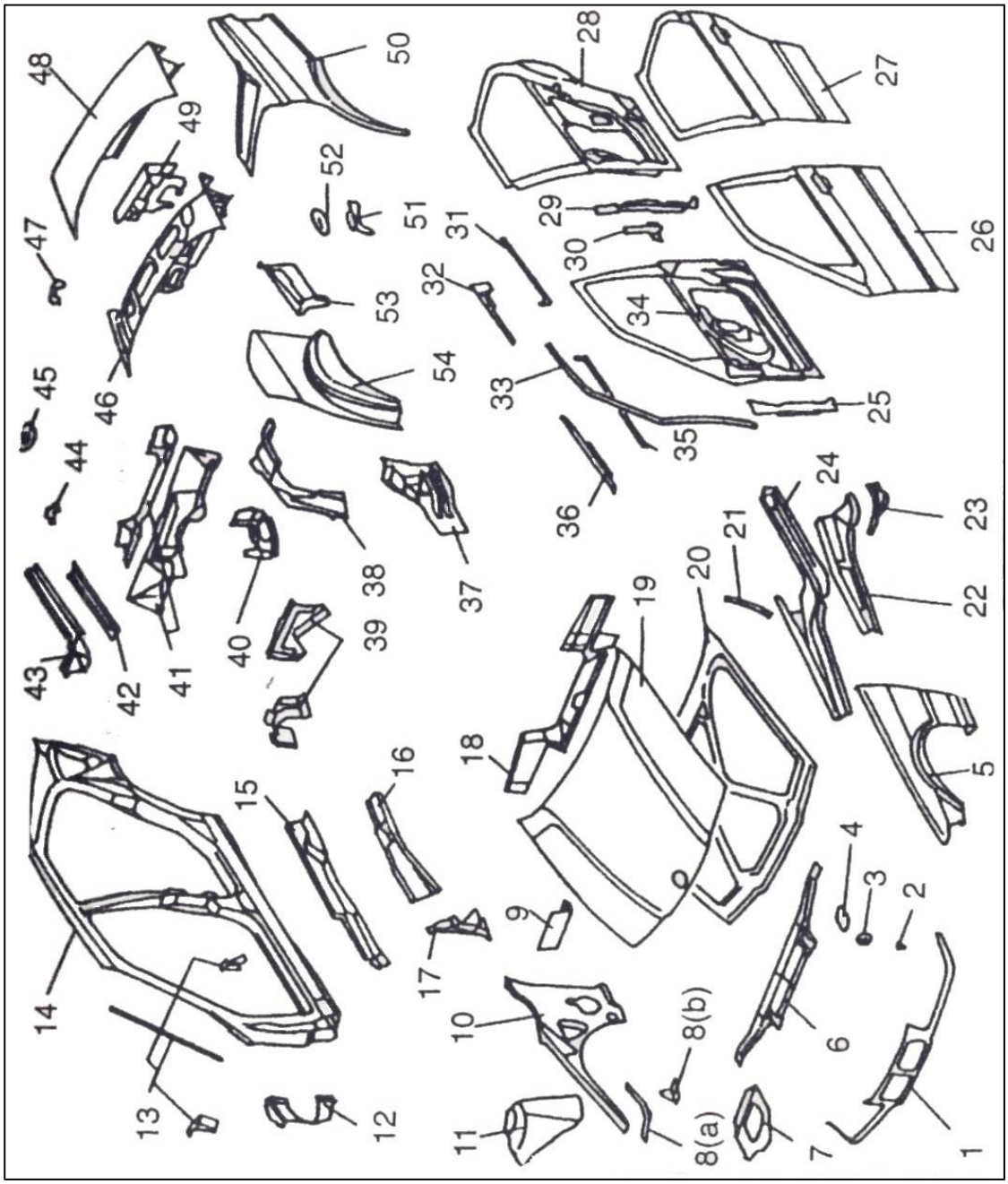

1	Front grille panel	B		28	Rear door frame RH and LH	B
2	Reinforcement	B		29	Rear door frame stiffener RH and LH	A
3	Front bumper mounting RH and LH	B		30	Rear door frame gusset RH and LH	B
4	Bonnet look reinforcement RH and LH	B		31	Rear door skin stiffener RH and LH	A
5	Front wing RH and LH	B		32	Rear door lock stiffener RH and LH	A
6	Bonnet lock panel	B		33	Front window frame stiffener RH and LH	A
7	Front suspension turret stiffener RH and LH	A		34	Front door frame RH and LH	B
8a/b	Front wheel arch gussets RH and LH	B(a) C(b)		35	Front door skin stiffener RH and LH	A
9	Front bulkhead stiffener RH and LH	A		36	Front door lock stiffener RH and LH	A
10	Front inner wing RH and LH	B		37	Sill rear gusset RH and LH	A
11	Front suspension turret RH and LH	A		38	Rear chassis leg RH and LH	A
12	A-post reinforcement RH and LH	B		39	Floor/heel board gussets	A
13	Body side gussets RH and LH	B		40	Rear chassis leg gusset RH and LH	B
14	Body side RH and LH	A		41	Boot floor cross members	A
15	Inner sill RH and LH	A		42	RH boot floor brace closing panel	A
16	Inner sill reinforcement RH and LH	A		43	Boot floor brace RH and LH	A
17	B-post gusset RH and LH	A		44	Boot floor bracket RH and LH	A
18	Upper dash panel	B		45	Rear bumper mounting gusset RH and LH	B
19	Bonnet skin	B		46	Boot lid frame	B
20	Bonnet frame	B		47	Exhaust rear hanger stiffener	B
21	Dash stiffener RH and LH	B		48	Boot lid skin	A
22	Front chassis leg closing panel RH and LH	A		49	Boot lid lock mounting stiffener	B
23	Front chassis leg gusset RH and LH	B		50	Rear wing RH and LH	A
24	Front chassis leg RH and LH	A		51	Rear suspension turret RH and LH	A
25	Front door frame stiffener RH and LH	A		52	Suspension turret capping RH and LH	B
26	Front door skin RH and LH	A		53	Boot floor side extension RH and LH	A
27	Rear door skin RH and LH	A		54	Outer rear wheel arch RH and LH	A

A = Galvanised one side only
B = Galvanised both sides
C = Galvanised layer applied individually

Summary

Sacrificial Protection:

This is the term used to describe the protection offered by zinc to the mild steel.

The automotive industry in seeking to provide extended warranties is turning increasingly to the use of zinc coated steels. Different areas of a vehicle require different zinc coatings and coatings weights to meet appearance and performance criteria.

zinc coating is the best way of protecting steel before it is pressed and formed into complex box sections, body sills, doors pillars and rook reinforcements, as access to these areas is difficult to spray paint.

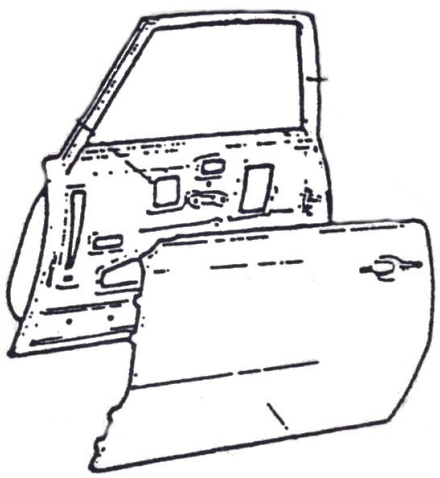

Figure 4: Door skin zinc coated on both sides

Self Assessment

Questions - Module 1. Unit 8

1. What is galvanised coating used for in vehicles?

2. What is the melting point of zinc?

3. What affect has zinc vapour have on shielding gas?

4. What must be worn when removing zinc from a panel?

5. What temperature is hot galvanising applied at?

6. How many microns of zinc coating are normally applied to a panel of a vehicle?

7. Why should you never use a grinder to prepare a substrate?

8. Is a door skin galvanised on both sides?

9. Is a wing galvanised on both sides?

10. What colour is galvanised coating?

Answers to Questions 1-10. Module 1. Unit 8

1.

To protect the metal from rusting.

2.

420ºC

3.

It causes turbulence

4.

A fume extraction system

5.

500ºC

6.

Between 40 and 150

7.

A grinder used to prepare a substrate will damage it and leave deep scratch marks.

8.

Yes, on some vehicles

9.

Yes

10.

Grey silver colour

Suggested Exercises

1. Remove galvanised coating from along the edge of galvanised steel sections 100mm x 50mm.
2. Weld sections together using normal welding techniques.
3. Note any difficulties if coating is not fully removed.
4. Apply post weld anti-corrosion treatment.

Exercise - Remove coating near weld

Instructions:

- Prepare two sections of galvanised steel 100mm x 50mm
- Remove the galvanised coating close to the weld site. Weld sections together.
- Use weld fume extractors/weld fume mask

Tools and Materials:

- Classroom/workshop
- Visual aids
- Various galvanised zintec panels
- Motor manufacturer's manuals
- M.I.G. welder, drill
- Fibre wheel
- Wire wheel
- Weld fume extractor
- Weld fume mask
- P.P.E.s galvanised steel
- Marking out tools, welding clamps
- Post weld coatings

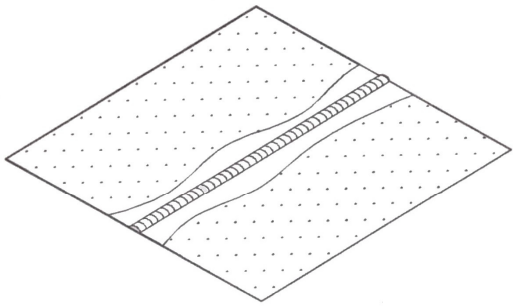

REMOVE COATING NEAR WELD

Dimensions	Gen. tol.	Scale	Material
mm	± 1mm	nts	Galvanised Steel
GALVANISED MATERIALS			
SOLAS	Phase 2. Mod 1. Practice		

Standards: Work carried out in a manner that is unlikely to cause injury to apprentice or others. The weld on should be made without any major defects

Training Resources

- Classroom
- Visual aids
- Various galvanised zintec panels
- Motor manufacturer's manuals
- Workshop
- M.I.G welder
- Drill
- Fibre wheel
- Wire wheel
- Weld fume extractor
- Weld fume mask
- P.P.E.s galvanised steel
- Marking out tools
- Welding clamps
- Post weld coatings

SOLAS

An tSeirbhís Oideachais Leanúnaigh agus Scileanna
Further Education and Training Authority

27-33 Upper Baggot Street
Dublin 4