TRADE OF
VEHICLE BODY REPAIR

PHASE 2

Module 3

UNIT: 5

Repair Benches

Produced by

SOLAS

An tSeirbhís Oideachais Leanúnaigh agus Scileanna
Further Education and Training Authority

In cooperation with subject matter expert:

Maurice Stack

Some material courtesy of CDX Global and FENC – Further Education National Consortium.

© SOLAS 2014

Table of Contents

Introduction 1

Learning Outcome 2
Repair Benches 2

1.0 Identify Types of Realignment Benches 3

1.1 Platform Benches 3

1.2 Floor Systems 4

1.3 Quick Pull Benches 6

1.4 Universal Bench/MINIBENCH 7

1.5 Lifting/Universal Bench PONY BENCH 8

1.6 Fixed and Adjustable Brackets 9

1.7 Adjustable Brackets 11

1.8 Mobile Repair Benches 15

1.9 Repair Benches Incorporating Lifts 16

1.10 Draw Aligner 17

1.11 Description of Warnings and Important Points 18

2.0 Setting up the Vehicle on the Bench 20

2.1 Determine the Location of the Under-body Clamps 20

2.2 Cleaning the Pinch Weld 20

3.0 Mount a Moderately Damaged Vehicle on a Mobile Repair System 21

3.1 Under-body Clamping Systems 22

Summary 23
Self Assessment 24
Training Resources

Table of Figures

Figure 1: Platform Bench 3

Figure 2: Chain Anchoring System; Floor Pot Anchoring Layout 4

Figure 3: OSA SPANESI TOTEM – Multiple Pulling System 5

Figure 4: DAYTONA Double: Multiple Pulling System in Floor CE approved. ... 5

Figure 5: Universal Bench MINIBENCH 7

Figure 6: Lifting/Universal Bench PONY BENCH 8

Figure 7: Blocks on cross beam adjustable 11

Figure 8: Adjustable Brackets 12

Figure 9: Superstar Universal Jig 13

Figure 10: Mobile Repair Benches 15

Figure 11: Repair Benches Incorporating Lifts 16

Figure 12: Draw Aligner 17

Figure 13: Location of Under-body Clamps 20

Figure 14: Mount a Vehicle on a Mobile Repair System 21

Introduction

Quality, speed and effectiveness are becoming increasingly more competitive in the collision repair industry.

This is especially true from vehicles that have suffered body and chassis damage. Customers expect their vehicle to be returned to them in pre-accident condition as quickly as possible. This is where the repair bench comes into action. Repair benches come in various sizes and forms. So care should be taken to select the correct one for the damage. Quick pull benches are designed for small damage that can be repaired quickly.

Platform benches, fixed and adjustable brackets and mobile benches are designed to pull and repair a varied amount of damage from small to extensive.

Unit Objective:

Repair Benches

By the end of this unit each apprentice will be able to:

- Identify types of realignment benches
- Mount a moderately damaged vehicle on a mobile repair system
- Determine the location of the under-body clamps
- Remove the vehicle from the repair bench

Key Learning Points:

- Platform bench
- Fixed and adjustable brackets
- Mobile repair benches
- Under-body clamping systems
- Cleaning the pinch weld
- Repair benches incorporating lifts

1.0 Identify Types of Realignment Benches

1.1 Platform Benches

A platform system provides all the benefits of the floor anchoring system when floor installations are not possible. Platforms come in various forms, some types sit on the floor and others incorporate lifts of which some tilt at one end and some lift complete and some incorporate a bellows, a small scissor lift in the centre.

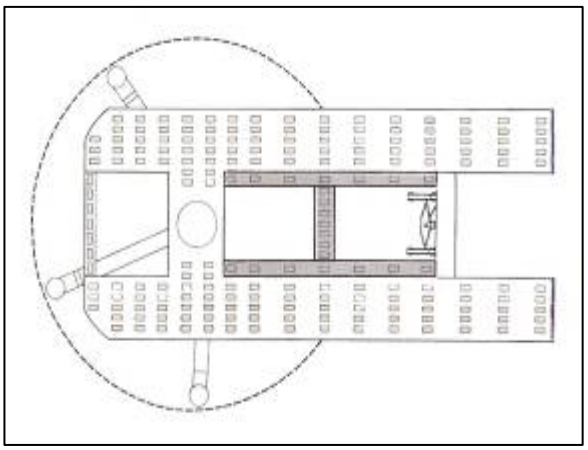

Figure 1: Platform Bench

1.2 Floor Systems

A floor system is a system that uses pots and chain or steel fixings to anchor the vehicle. This system needs to be set in concrete during construction of the building and it requires a lot of steel reinforcement to give it strength.

This system is based on the floor based anchoring concept – proven to be the most productive bodyshop layout. With this concept a repair bay becomes a production straightening repair station for both light work and heavy hits.

The following anchoring layout diagrams show typical floor pot and floor rail anchoring layouts. The outside dimensions sown for the anchoring pots and rails are minimum dimensions.

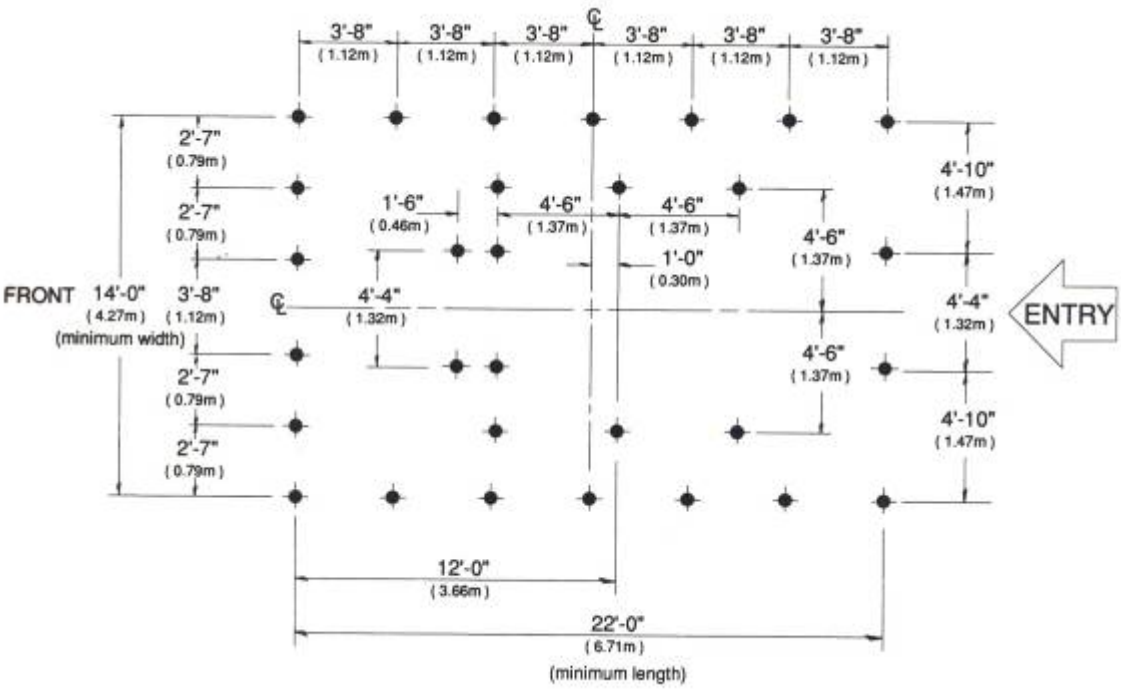

Figure 2: Chain Anchoring System; Floor Pot Anchoring Layout

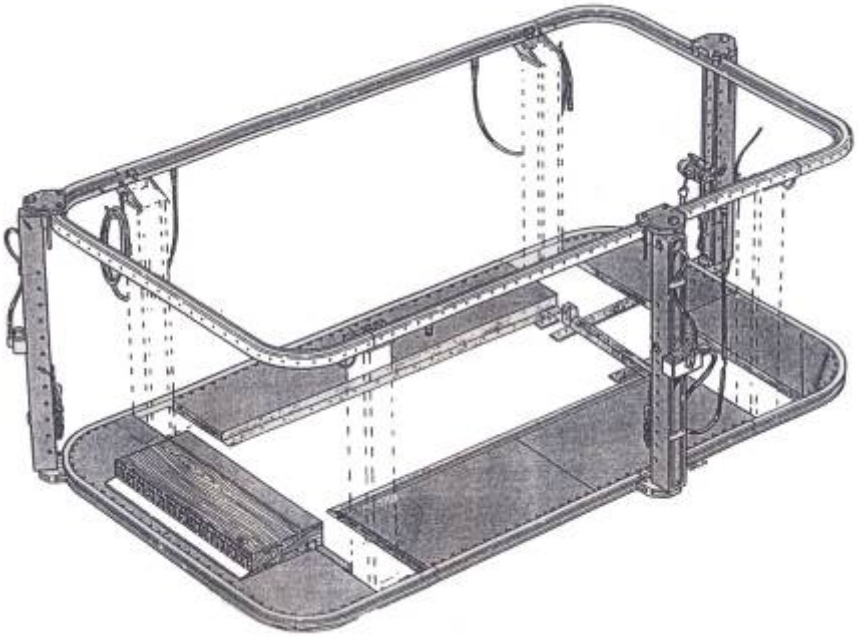

Figure 3: OSA SPANESI TOTEM – Multiple Pulling System

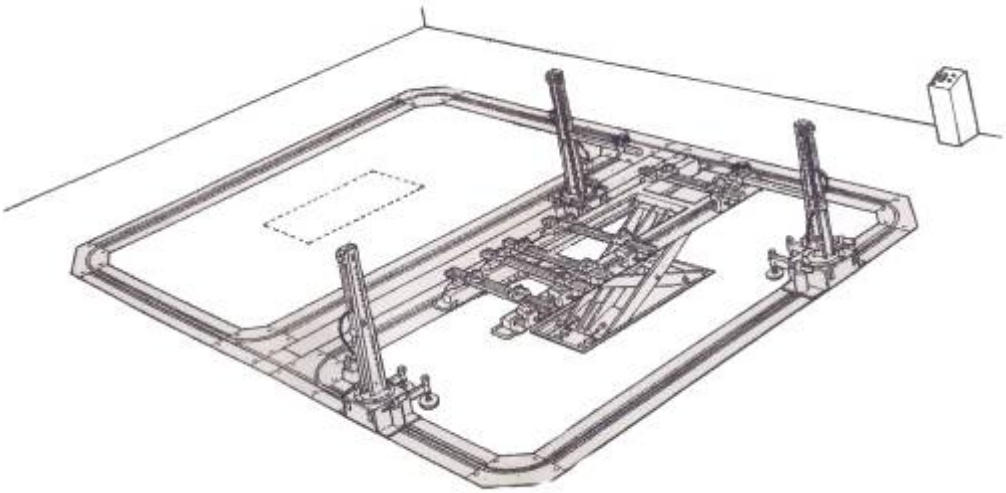

Figure 4: DAYTONA Double: Multiple Pulling System in Floor CE approved.

1.3 Quick Pull Benches

Quick pull benches are designed to repair light to moderate hit vehicles and it's important before loading a vehicle on a bench to determine the extent of the damage by putting it on a hoist and examining it thoroughly.

1.4 Universal Bench/MINIBENCH

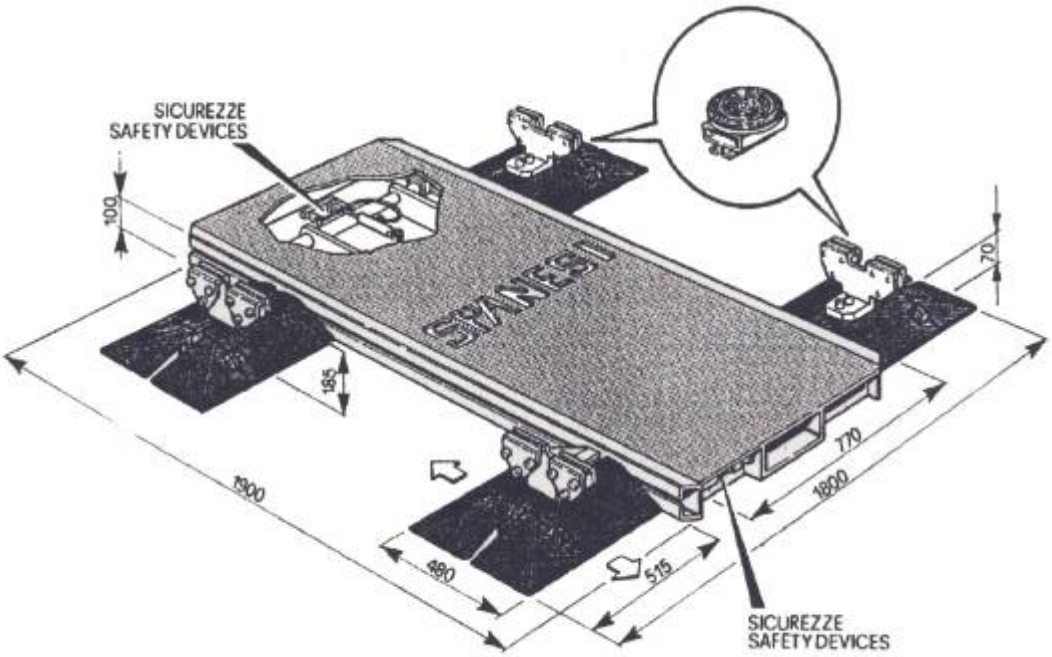

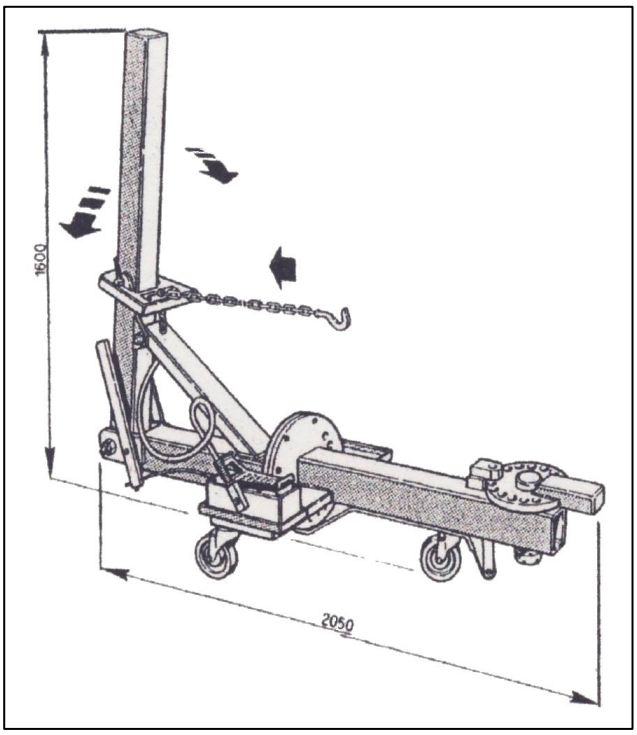

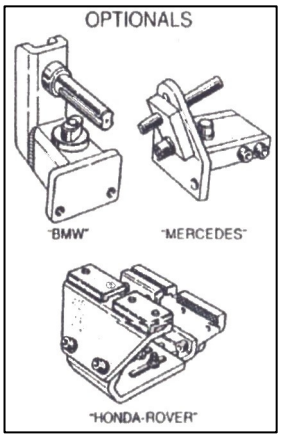

Figure 5: Universal Bench MINIBENCH

1.5 Lifting/Universal Bench PONY BENCH

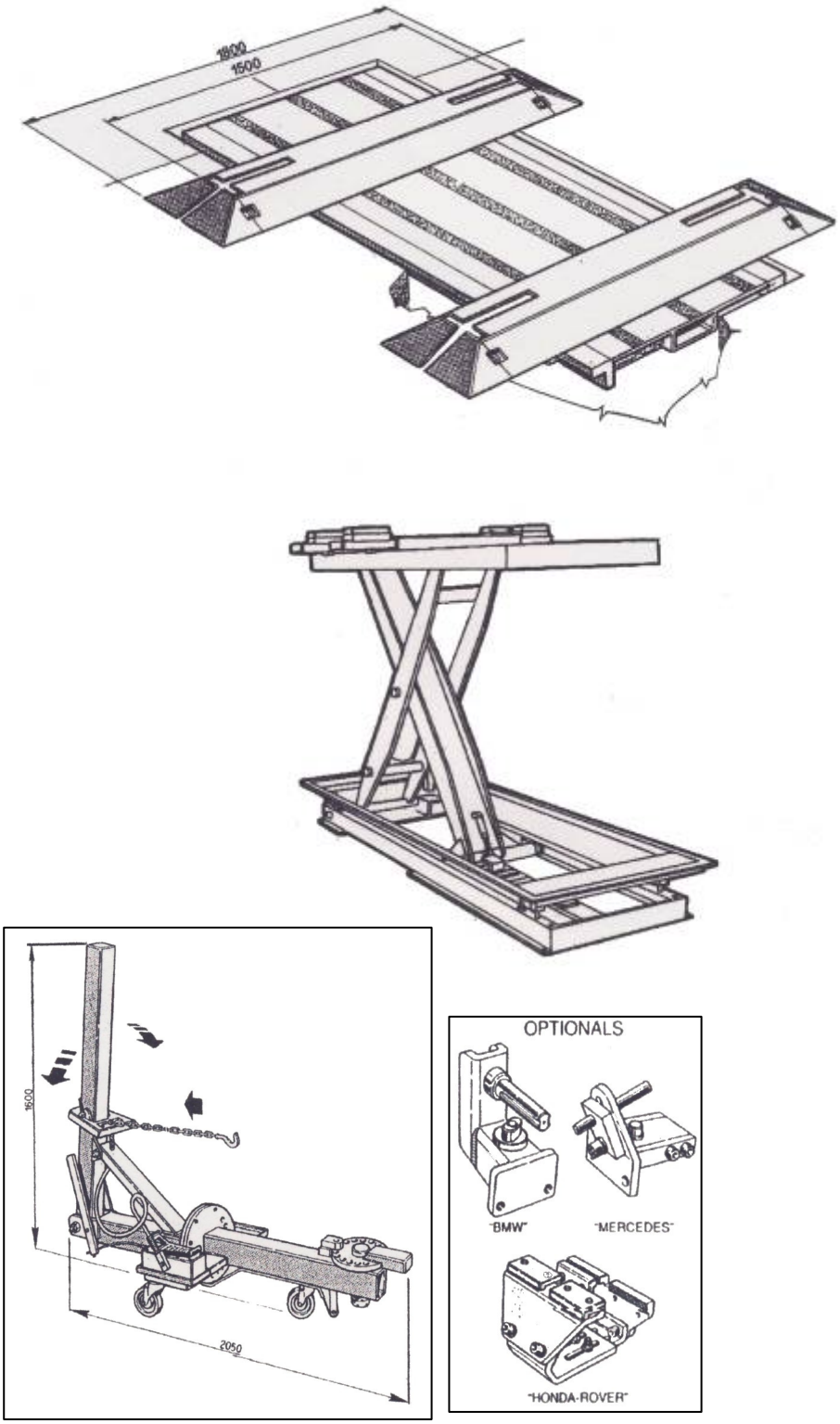

Figure 6: Lifting/Universal Bench PONY BENCH

1.6 Fixed and Adjustable Brackets

The two main manufacturers of fixed bracket systems (Jig) are car bench and celette a jig bracket is a steel fixing that is accurately designed to measure and hold points on a vehicles chassis in its correct position as set by the vehicle manufacturers. Jig brackets are widely endorsed by vehicle manufacturers and are the preferred method of holding hard hits. It is also preferred if a damaged chassis is to be repaired rather than replaced.

Car bench

Car bench brackets

Celette bench

Pull Tower

Bracket Base

Bracket tops

Brackets complete

Complete bench/brackets

1.7 Adjustable Brackets

Adjustable brackets (manufacturers Spanesi Global Jig) are steel fixings that are accurately designed to measure and hold points on a vehicles chassis in its correct position as set out by the manufacturers, but they are not welded brackets that are set to fit a specific model. They need to be built up from a drawing to suit the vehicle being repaired.

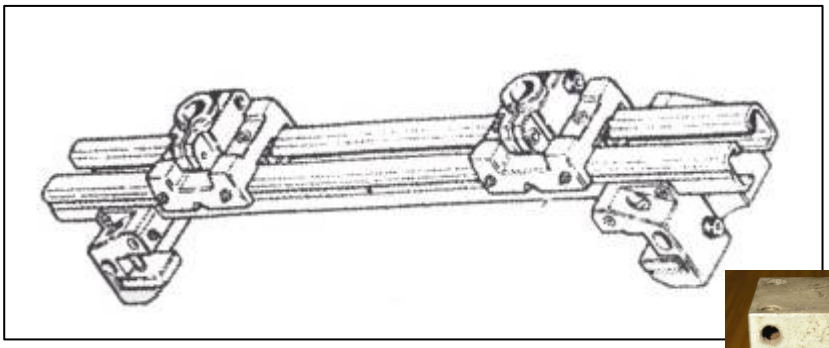

Figure 7: Blocks on cross beam adjustable

Cube adjustable

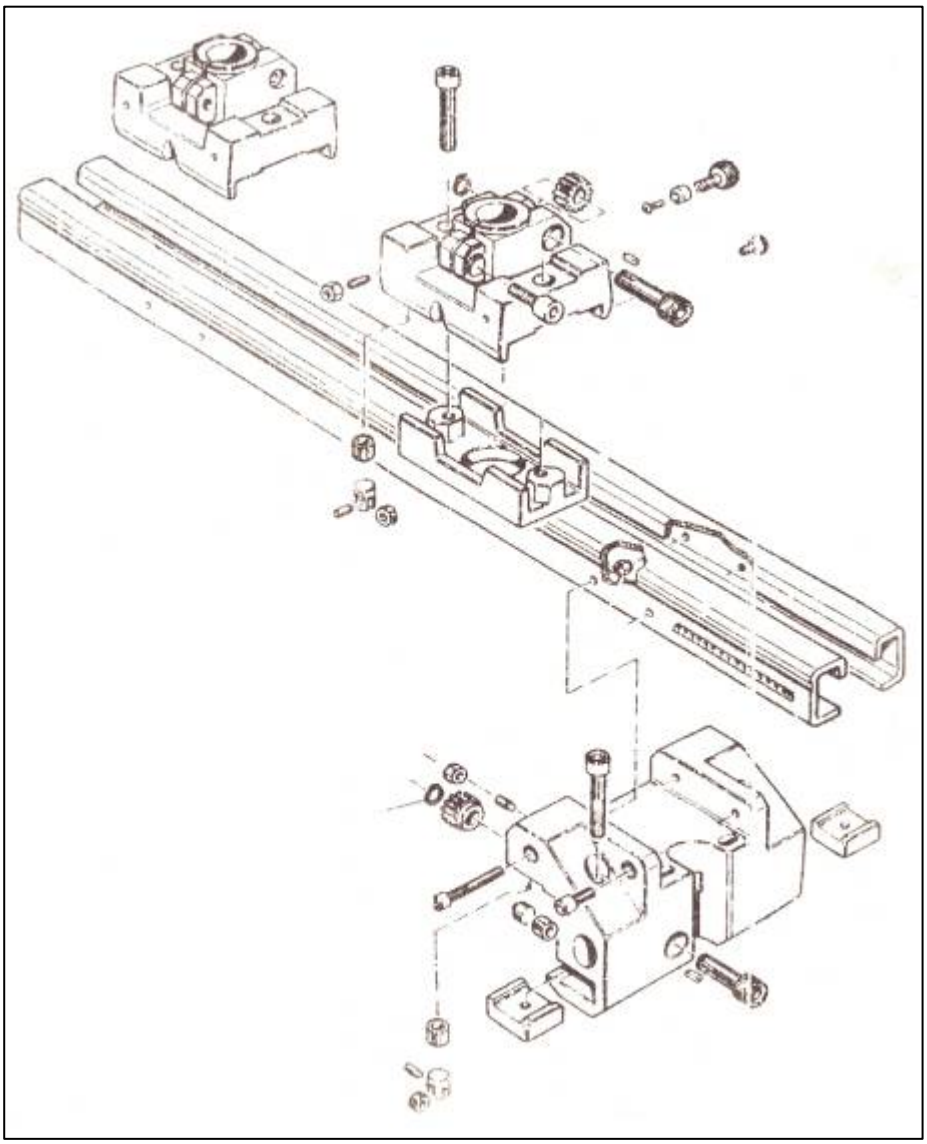

Figure 8: Adjustable Brackets

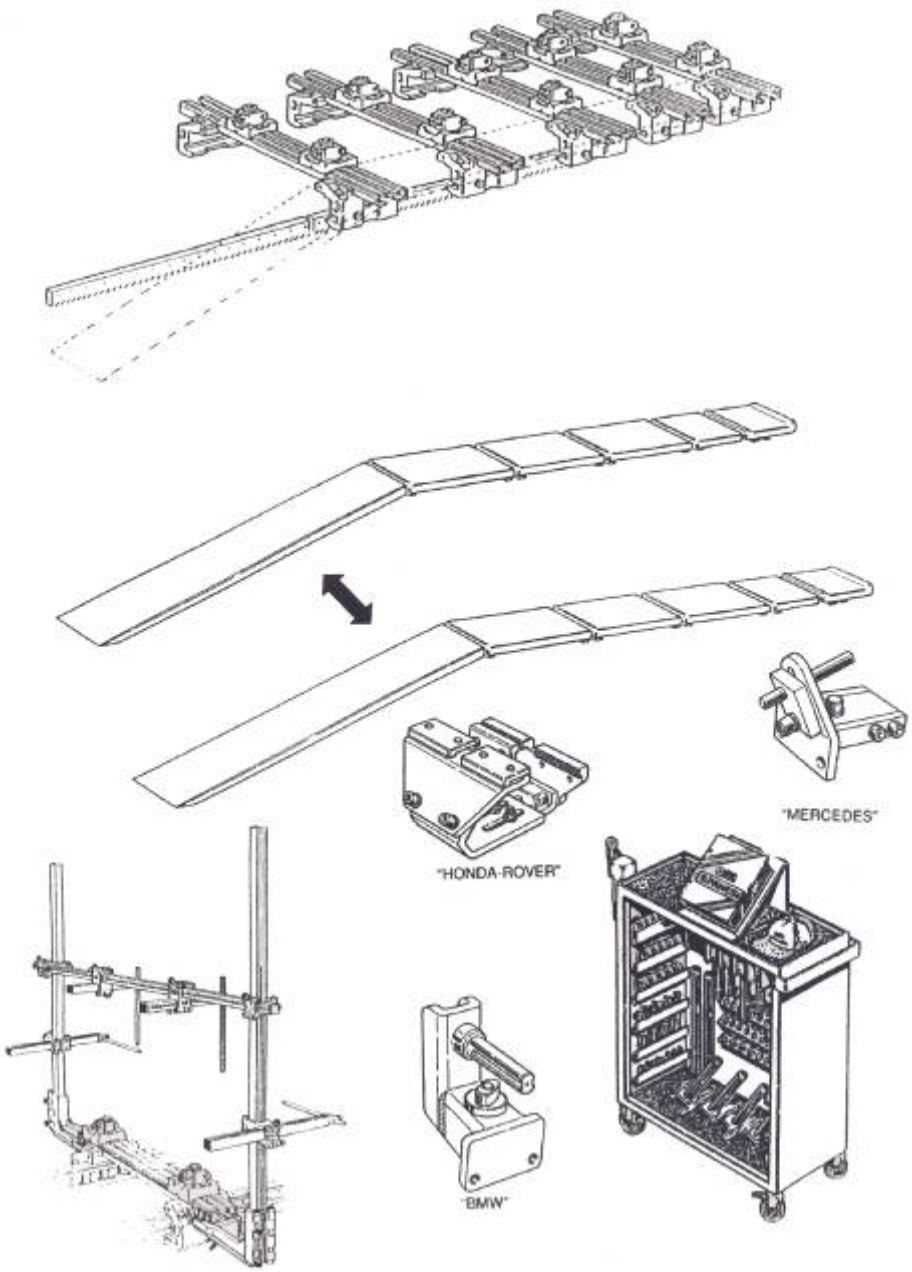

Figure 9: Superstar Universal Jig

Adjustable Brackets

1.8 Mobile Repair Benches

The principle of a mobile repair bench is the same as any repair bench; it more or less does the same job. The only significant difference is wheels, which allow movement around the workshop floor.

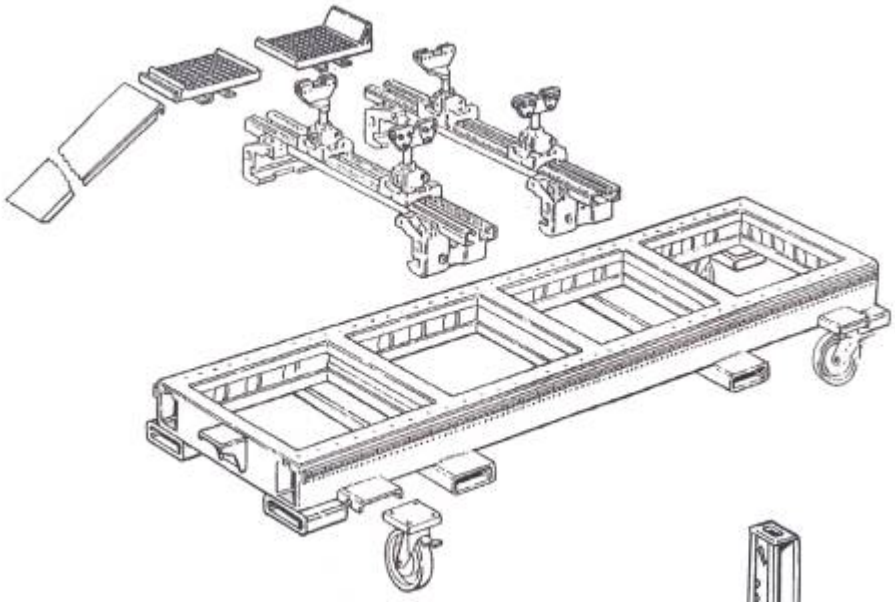

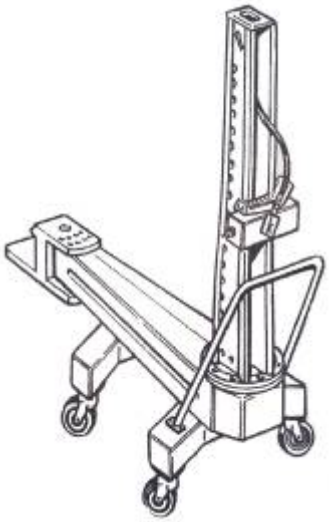

Figure 10: Mobile Repair Benches

1.9 Repair Benches Incorporating Lifts

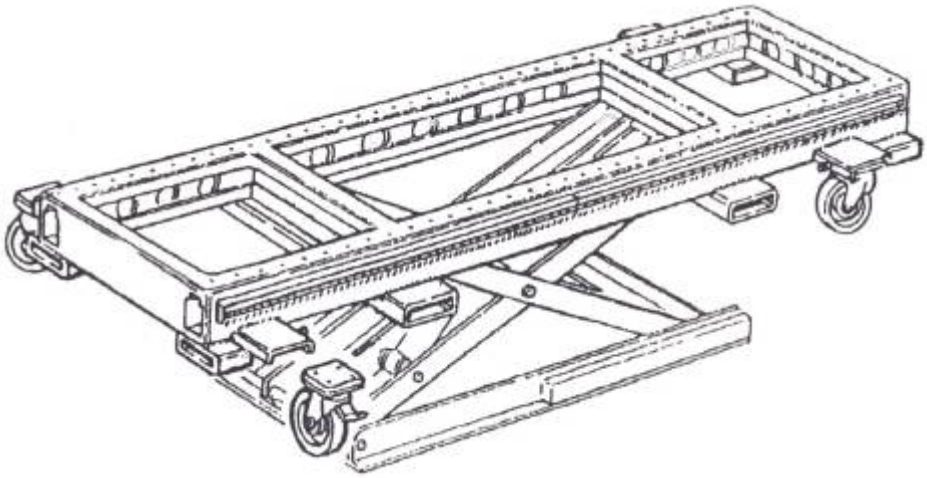

Figure 11: Repair Benches Incorporating Lifts

1.10 Draw Aligner

Important: The draw aligner is intended for use with a max 10 – ton hydraulic ram.

The draw aligner can be placed at any position along the four sides of the base frame. It is locked on to the base frame by the locking wedge (1). The draw aligner pivots in the sideways direction and is locked in the required position by a peg (2). The arm (3) can be inclined in the sideways direction, to give the optimum pulling angle. It is then locked into position with a peg (4). The arm is fitted with an extension arm (5). A safety wire (6) is fitted between the arm and the hydraulic ram mounting; the purpose of this is to limit the outward movement of the arm. The hydraulic ram (7) has a capacity of 10 ton and is operated by the pneumatic pump (8). Mounting (9) for hydraulic ram.

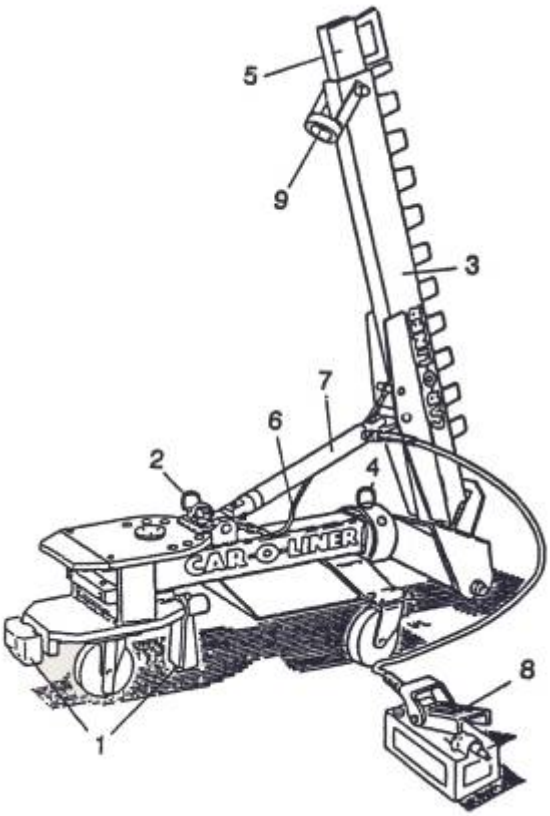

Figure 12: Draw Aligner

1.11 Description of Warnings and Important Points

Read all safety signs carefully and follow their instructions.

The signs must be kept in good condition at all times.

Replace any missing or damaged signs.

	Safety/Repair Benches
	FLYING OBJECTS Do not stand behind the draw aligner while a pull is in progress. Risk of flying objects!
	WORKING WITH JACKS AND OR HYDRAULIC EQUIPMENT Risk of falling or flying objects!
	BRAKES ON WHEELS Always apply the wheel brakes when movement is not required. Risk of the bench rolling.
	LOOSE HOSES Loose Hoses, etc. risk of tripping!
	MOVING THE TOOL TROLLEY Always pull the trolley by the handle on the side. Make sure that the drawer is closed; otherwise, the trolley can tip over.

IMPORTANT! The floor under a bench with wheels must be level so that there is no risk of the bench beginning to roll. Always apply the wheels brakes.

IMPORTANT! The draw aligner is intended for use with a max 10 ton hydraulic ram.

IMPORTANT! Make sure that toothed jaw segments are clean and are fitted with the teeth pointing in the right direction. This ensures the best possible grip on the sill flange.

IMPORTANT! Do not tighten nuts and bolts too hard. If a nut-runner is used make sure that it is set to a max.

2.0 Setting up the Vehicle on the Bench

2.1 Determine the Location of the Under-body Clamps

Try to place the centre lines of the vehicle and the bench as close together as possible. Position the car, in the longitudinal direction, to facilitate work on the damaged area with the draw aligner.

Mark dimensions A and B with chalk or tape. Vehicle must be on its suspension.

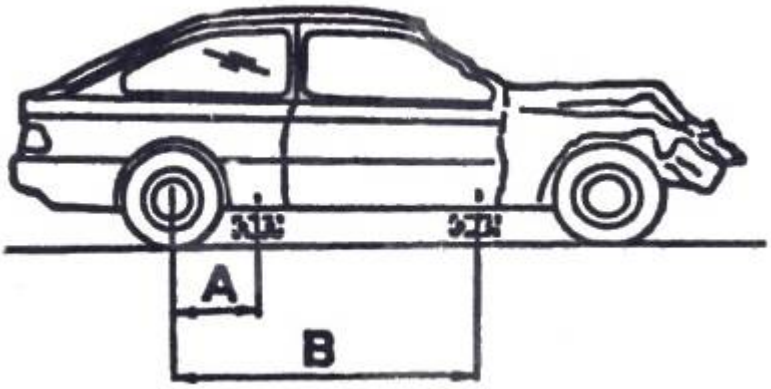

Figure 13: Location of Under-body Clamps

2.2 Cleaning the Pinch Weld

Clean away underbody compound and dirt to give the chassis clamp a good grip and to give the correct vertical dimensions.

IMPORTANT! Make sure that toothed jaw segments are clean and are fitted with the teeth pointing in the right direction. This ensures the best possible grip on the sill flange.

3.0 Mount a Moderately Damaged Vehicle on a Mobile Repair System

Procedure:

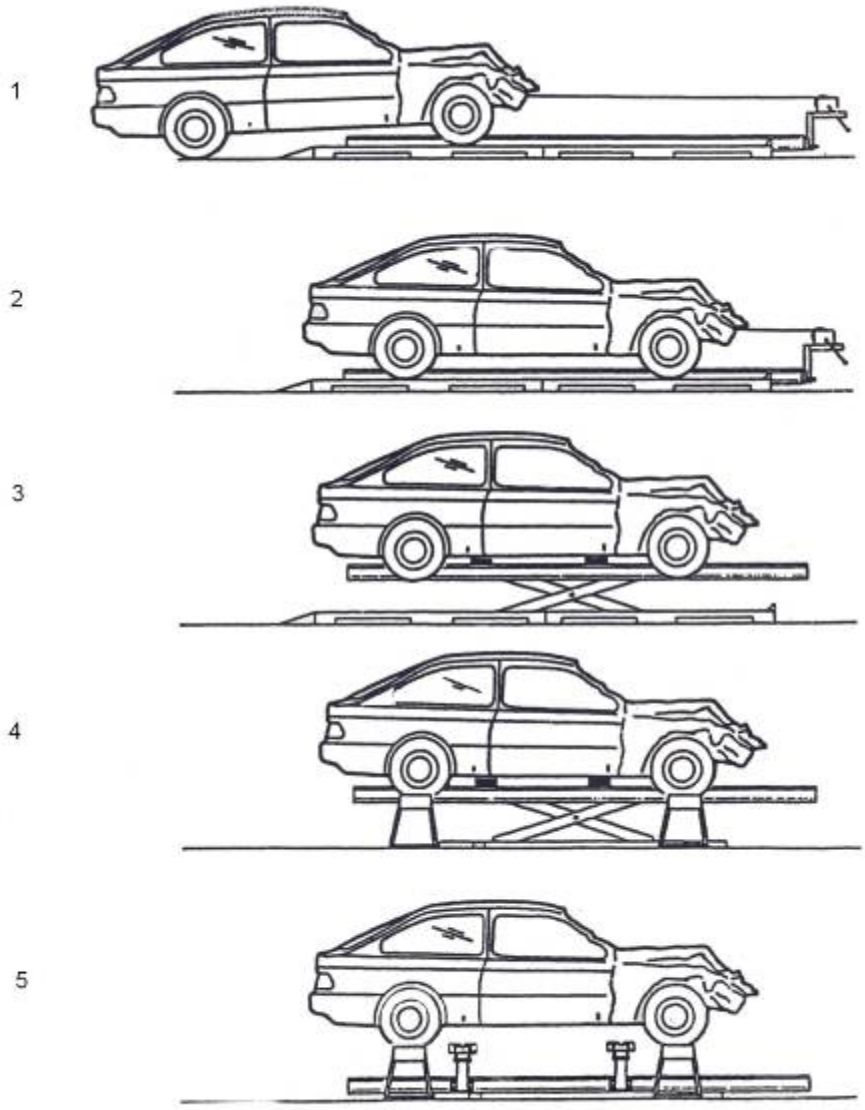

Figure 14: Mount a Vehicle on a Mobile Repair System

1) Winch the vehicle onto the bench.
2) Position vehicle in proper location.
3) Fit rubber blocks and hoist vehicle.
4) Lower vehicle onto wheel stands.
5) Fit clamps to bench.
6) Clamp vehicle now ready to repair.

3.1 Under-body Clamping Systems

Summary

An emerging trend in the jig market is almost a return to old values, yet it is only possible because of the technology developed over the last few years. More and more insurers and repairers are looking at repairing damaged vehicles, an event almost unheard of in the last few years, where strip and fit versus write off seemed to be the only options.

The advancement of equipment lies at the root of this change. Whereas in the past it was either not possible or financially viable to repair heavy chassis damage, body shops now have the capability to do so quickly and easily.

Self Assessment

Questions – Module 3. Unit 5

1. What is a repair bench?

2. What is a platform bench?

3. Explain what a floor system is?

4. What is a quick pull bench?

5. Explain a fixed bracket?

6. Name one manufacturer of fixed brackets.

7. What is an adjustable bracket?

8. State a big advantage of a mobile bench.

9. What is a draw liner used for?

10. Why do you use a safety wire?

11. Will the common sill clamp, clamp a BMW?

12. Why is it important to clean the pinch weld?

13. What risk exists when working with jacks or hydraulic equipment?

14. Why is it important not to stand behind the draw liner when a pull is in progress?

Answers to Questions 1-14. Module 3. Unit 3

1.

A repair bench is a system to re-align a vehicle.

2.

A platform bench is a table for realigning.

3.

A floor system is a series of pots in the floor with chains in them.

4.

A quick pull bench is a small bench designed to mount a vehicle quickly and pull it quickly.

5.

A repair system that uses non adjustable brackets to align the vehicle body.

6.

Celette

7.

Like a fixed bracket but is universal and can be used anywhere.

8.

A mobile bench can be used anywhere.

9.

A draw liner is used to pull out damage on a vehicle.

10.

To protect yourself and others if the pull clamp comes free.

11.

No

12.

To stop the vehicle from slipping in the sill clamp.

13.

The danger of failure of the hydraulic system.

14.

It's important not to stand behind a draw liner while a pull is in progress because if the clamp comes free there is a risk of serious injury or even death.

Suggested Exercises

- Determine the nature of damage to vehicle
- Select the location of the under-body clamps
- Install the vehicle onto repair bench
- Remove vehicle and store all tools and parts appropriately

See Module 3. Unit 2 Vehicle measuring for data sheets

SOLAS

An tSeirbhís Oideachais Leanúnaigh agus Scileanna
Further Education and Training Authority

27-33 Upper Baggot Street
Dublin 4